No. PE-S6S-31TFLB

TCM®

PARTS CATALOGUE

DIESEL ENGINE

① S6S-31TFL

② S6S-31TFLW

MITSUBISHI

E/G TYPE	APPLICABLE MODEL 適用機種	
	Model 機種名	Symbol 記号
①	FD35T9	43B
	FD40T9	43E
	FD45T9	43G
	FD50T9	43H
②	FD35C9	43A
	FD40C9	43C
	FD45C9	43F

TCM CORPORATION

ご使用のまえに

このパーツカタログは，TCM フォークリフト のエンジンの構成部品を収録しています。

部品ご注文について

部品ご注文の際は，必ず車両の形式・製造番号（号車），エンジンの形式・製造番号（号機），部品番号および注文数を明示してください。車両の製造番号（号車）は車両銘板に，エンジンの製造番号（号機）は，シリンダブロックに打刻で表示しています。

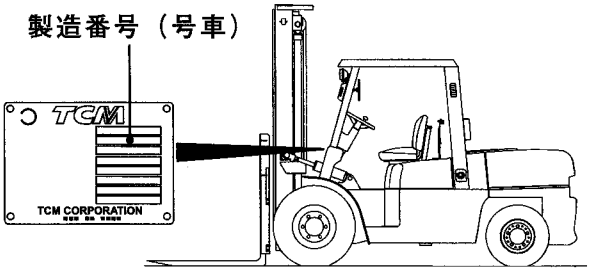

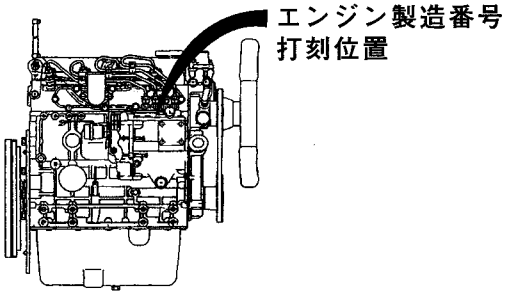

ご使用について

部品名称はわかっているが，部品番号を知りたいときは，……

→ 目次を見て，部番リストの図番号（FIG. No.）を見付けます。

組付け位置はわかっているが，部品番号を知りたいときは，……

→ 目次を見て，部番リストの図番号（FIG. No.）を見付けます。

→ イラストの確認，部品番号の検索，号車（号機）の確認をします。

→ 正確な部品番号，形状，名称や履歴がわかります。

略語および記号

ASSY	組立品を示します。
O. S.	オーバサイズ仕様部品を示します。
U. S.	アンダサイズ部品を示します。
STD	標準装備品を示します。
*	セットおよびキットの販売部品を示します。
AR	必要に応じた数を使用します。
L	長さを示します。
＋	図示していません。
FORWARD	ファン側が前方であることを示します。
t	厚みを示します。
z	歯数を示します。

部品は，品質向上のため予告なく変更することがありますので，あらかじめご了承ください。

INTRODUCTION

This Parts Catalogue contains the component parts of the engine mounted on **TCM FORKLIFT TRUCK**.

How to order parts

When ordering, be sure to specify the model name and serial number (machine number), engine type and serial number (engine number) of your machine, as well as the part number and desired quantity for each part. The machine serial number (machine number) is indicated on the machine name plate, the engine serial number (engine number) is punched on the cylinder block.

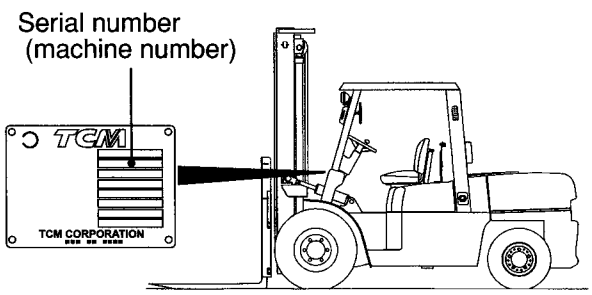

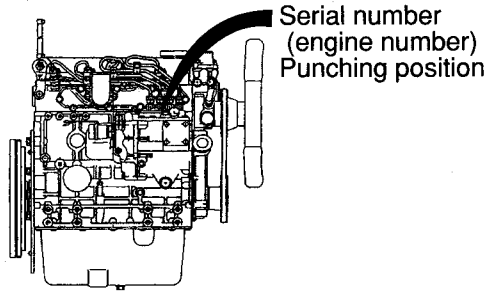

How to use the Parts Catalogue

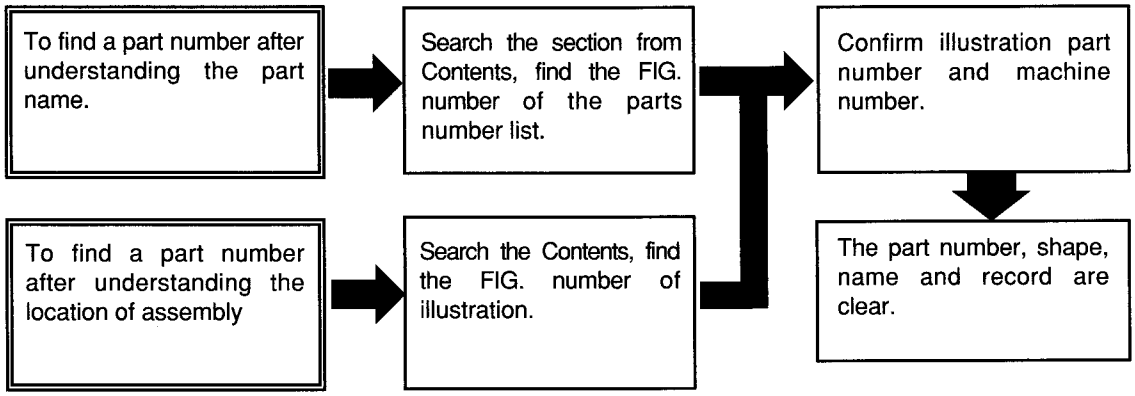

Abbreviations and symbols

ASSY ····· Assembled unit.
O.S. ····· Oversize.
U.S. ····· Undersize.
STD ····· Standard.
* ····· The marketable part set or kit.
AR ····· Quantity required.
L ····· Length.
+ ····· Not illustrated.
FORWARD ·· It is shown that a fan side is the forward.
t ····· Thickness.
z ····· Number of teech on the gear.

Materals and specifications subject to change without notice.

APPLICABLE MODEL
適用機種

S6S-31TFL, S6S31TFLW

TYPE	E/G TYPE	Model 機種名	Symbol 記号
A	S6S-31TFL	FD35T9	43B
		FD40T9	43E
		FD45T9	43G
		FD50T9	43H
B	S6S-31TFLW	FD35C9	43A
		FD40C9	43C
		FD45C9	43F

CONTENTS
目　　次

A: S6S-31TFL　B: S6S-31TFLW

SECTION	部　門	FIG.No. 図番号
OVERHAUL GASKET KIT	オーバホールガスケットキット	1
ENGINE BODY	エンジン本体	
CRANKCASE	クランクケース	2
REAR PLATE & MAIN METAL	リヤープレート＆メインメタル	3
PISTON & CONNECTING ROD	ピストン＆コネクティングロッド	4
CRANKSHAFT & FLYWHEEL	クランクシャフト＆フライホイール	5
TIMING GEAR CASE	タイミングギヤーケース	6
OIL PAN	オイルパン	7
HEAD & VALVE MECHANISM	ヘッド＆バルブメカニズム	
CYLINDER HEAD	シリンダヘッド	8
ROCKER COVER & CAMSHAFT	ロッカカバー＆カムシャフト	9
VALVE MECHANISM	バルブメカニズム	10
INLET & EXHAUST	インレット＆エキゾースト	
INLET & EXHAUST SYSTEM	インレット＆エキゾーストシステム	11
LUBRICATION	潤滑装置	
OIL SYSTEM	オイルシステム	12
COOLING	冷却装置	
COOLING SYSTEM	クーリングシステム	13
FUEL	燃料装置	
FUEL SYSTEM	フューエルシステム	14
NOZZLE & HOLDER	ノズル＆ホルダ	15
INJECTION PUMP	インジェクションポンプ	16
FUEL FILTER	フューエルフィルタ	17
ELECTRICAL	エレクトリカル	
ELECTRICAL PARTS	エレクトリカルパーツ	18
STARTER	スタータ	19
ALTERNATOR	オルタネータ	20
PARTS NUMBER INDEX	部品番号順索引表	1 ～ 3

FIG. 1 OVERHAUL GASKET KIT
オーバ゛ホールガ゛スケットキット

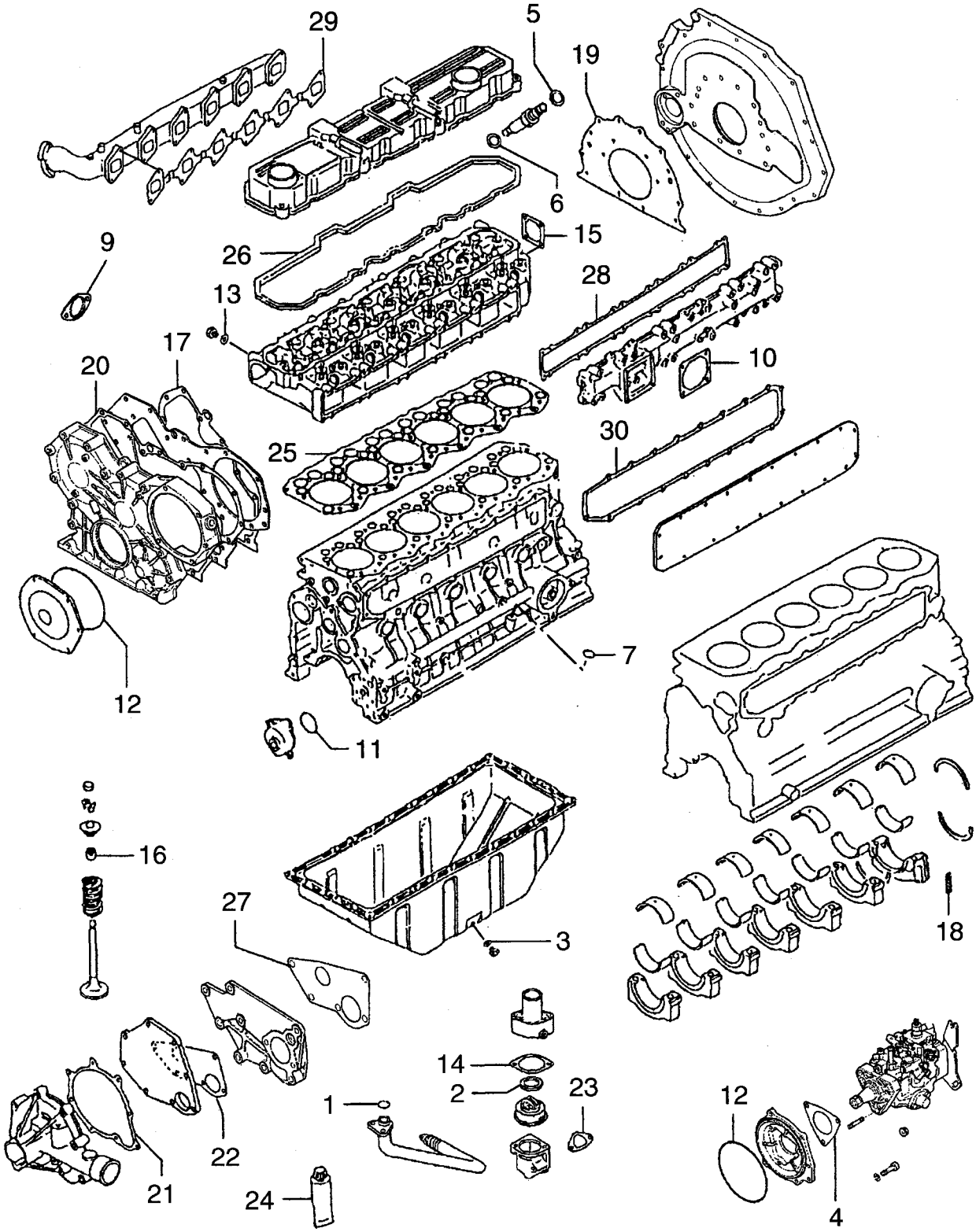

A: S6S-31TFL B: S6S-31TFLW

Item No. 見出番号	Part No. 部品番号	Mark 記号	Description 部品名称		Req'd 個数	Remarks : serial No. 備考：実施号車
K	AG-32B94-01070		OVERHAUL GASKET KIT	ｵｰﾊﾞﾎｰﾙｶﾞｽｹｯﾄｷｯﾄ	1	INC.1-30
1	AG-F3150-02000	*	O RING	Oﾘﾝｸﾞ	1	
2	AG-31346-11900	*	GASKET	ｶﾞｽｹｯﾄ	1	
3	AG-F4202-20000	*	GASKET	ｶﾞｽｹｯﾄ	1	
4	AG-30461-71601	*	GASKET	ｶﾞｽｹｯﾄ	1	
5	AG-MD068355	*	GASKET,FUEL RETURN	ｶﾞｽｹｯﾄ	6	
6	AG-MD070717	*	GASKET,HOLDER	ｶﾞｽｹｯﾄ	6	
7	AG-05507-10110	*	O RING	Oﾘﾝｸﾞ	1	
8	AG-05946-01201	*+	WASHER,SEALING	ﾜｯｼｬ	2	
9	AG-32B32-00800	*	GASKET,EXHAUST	ｶﾞｽｹｯﾄ	1	
10	AG-34330-04300	*	GASKET,AIR HEATER	ｶﾞｽｹｯﾄ	1	
11	AG-32A35-00600	*	O RING	Oﾘﾝｸﾞ	1	
12	AG-06016-13140	*	O RING	Oﾘﾝｸﾞ	2	
13	AG-30636-25901	*	GASKET	ｶﾞｽｹｯﾄ	2	
14	AG-34446-05300	*	GASKET	ｶﾞｽｹｯﾄ	1	
15	AG-32A01-02501	*	GASKET,HEAD REAR	ｶﾞｽｹｯﾄ	1	
16	AG-32A04-02801	*	SEAL,VALVE STEM	ｼｰﾙ	12	
17	AG-32A07-04100	*	GASKET,FRONT PLATE	ｶﾞｽｹｯﾄ	1	
18	AG-32A07-11700	*	SEAL,SIDE	ｼｰﾙ	2	
19	AG-32A07-14201	*	GASKET,REAR	ｶﾞｽｹｯﾄ	1	
20	AG-32A11-00200	*	GASKET,GEAR CASE	ｶﾞｽｹｯﾄ	1	
21	AG-32A45-00400	*	GASKET,PUMP COVER	ｶﾞｽｹｯﾄ	1	
22	AG-32A45-00500	*	GASKET,WATER PUMP	ｶﾞｽｹｯﾄ	1	
23	AG-32B46-00200	*	GASKET,THERMO CASE	ｶﾞｽｹｯﾄ	1	
24	AG-32A91-05100	*	GASKET,LIQUID	ｶﾞｽｹｯﾄ	1	
25	AG-32B01-12100	*	GASKET,CYLINDER HEAD	ｶﾞｽｹｯﾄ	1	
26	AG-32B04-03200	*	GASKET,ROCKER COVER	ｶﾞｽｹｯﾄ	1	
27	AG-32B45-05500	*	GASKET,WATER	ｶﾞｽｹｯﾄ	1	
28	AG-32B30-00201	*	GASKET,INLET MANF	ｶﾞｽｹｯﾄ	1	
29	AG-32B32-00200	*	GASKET,EXHAUST MANF	ｶﾞｽｹｯﾄ	1	
30	AG-32B39-01200	*	GASKET,SIDE COER	ｶﾞｽｹｯﾄ	1	

FIG. 2 CRANKCASE
クランクケース

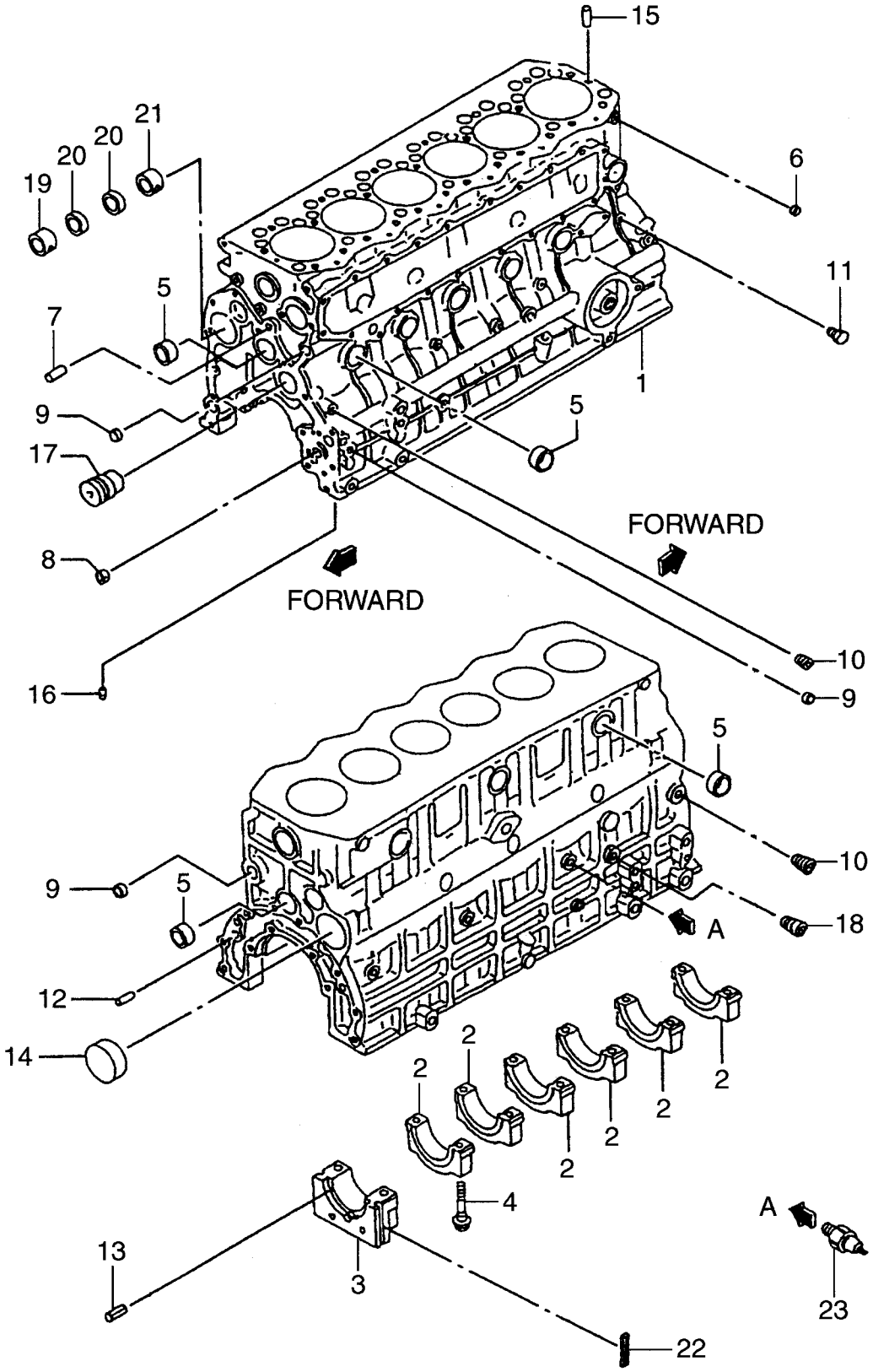

A: S6S-31TFL B: S6S-31TFLW

Item No. 見出番号	Part No. 部品番号	Mark 記号	Description 部品名称		Req'd 個数	Remarks : serial No. 備考：実施号車
A1	AG-32B07-01014		CRANKCASE ASSY	ｸﾗﾝｸｹｰｽｱｯｾﾝ	1	INC.1-21
A2	NO PART NO.		CRANKCASE SUB ASSY	ｸﾗﾝｸｹｰｽｻﾌﾞｱｯｾﾝ	1	INC.1-5
1	NO PART NO.		CRANKCASE	ｸﾗﾝｸｹｰｽ	1	
2	NO PART NO.		CAP	ｷｬｯﾌﾟ	6	
3	NO PART NO.		CAP	ｷｬｯﾌﾟ	1	
4	AG-32A07-02600		BOLT	ﾎﾞﾙﾄ	14	
5	AG-04826-23500		CAP,SEALING	ｷｬｯﾌﾟ	14	
6	AG-04826-21800		CAP,SEALING	ｷｬｯﾌﾟ	1	
7	AG-32A07-01501		PIN,DOWEL	ﾋﾟﾝ	2	
8	AG-05605-01410		BUSHING	ﾌﾞｯｼﾝｸﾞ	1	
9	AG-04826-21800		CAP,SEALING	ｷｬｯﾌﾟ	7	
10	AG-MS661140		PLUG	ﾌﾟﾗｸﾞ	9	
11	AG-MD000269		PLUG	ﾌﾟﾗｸﾞ	1	
12	AG-F2846-12000		PIN,DOWEL	ﾋﾟﾝ	2	
13	AG-F2850-04008		PIN,SPRING	ﾋﾟﾝ	6	
14	AG-34307-02100		PLUG	ﾌﾟﾗｸﾞ	1	
15	AG-F2846-05000		PIN,DOWEL	ﾋﾟﾝ	2	
16	NO PART NO.		PLUG	ﾌﾟﾗｸﾞ	4	
17	AG-32A23-03500		SHAFT,IDLER	ｼｬﾌﾄ	1	
18	AG-MS661142		PLUG	ﾌﾟﾗｸﾞ	2	
19	AG-34307-12701		BUSHING,FRONT	ﾌﾞｯｼﾝｸﾞ	1	
20	AG-34307-02802		BUSHING,MIDDLE	ﾌﾞｯｼﾝｸﾞ	2	
21	AG-34307-02901		BUSHING,REAR	ﾌﾞｯｼﾝｸﾞ	1	
22	AG-32A07-11700		SEAL,SIDE	ｼｰﾙ	2	
23	AG-MC840219		SWITCH,OIL PRESSURE	ｽｲｯﾁ	1	

FIG. 3 REAR PLATE & MAIN METAL
リヤープレート&メインメタル

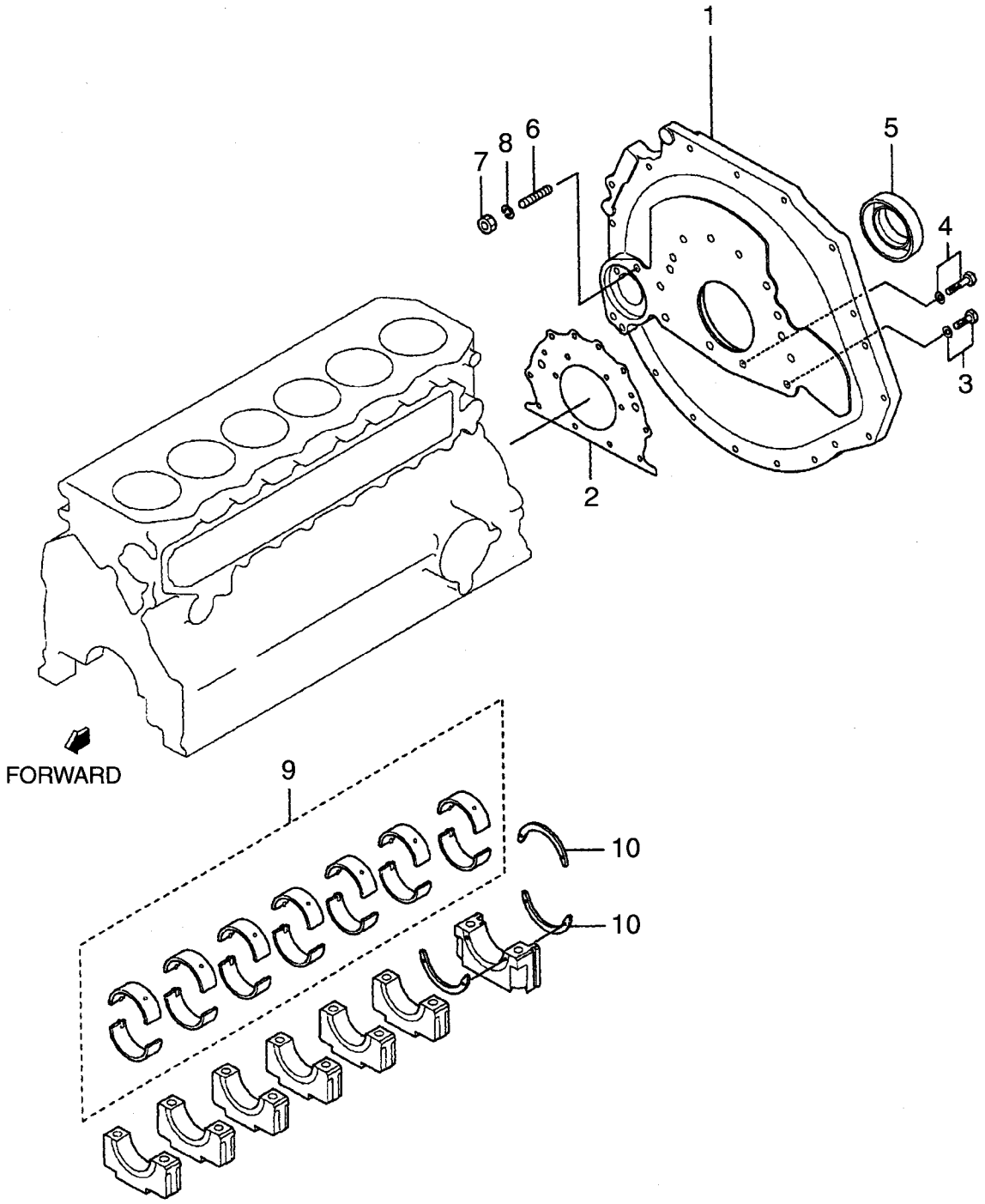

A: S6S-31TFL B: S6S-31TFLW

Item No. 見出番号	Part No. 部品番号	Mark 記号	Description 部品名称		Req'd 個数	Remarks : serial No. 備考：実施号車
1	AG-32B07-06600		PLATE,REAR	ﾌﾟﾚｰﾄ	1	
2	AG-32A07-14201		GASKET	ｶﾞｽｹｯﾄ	1	
3	AG-F1805-10025		BOLT&WASHER	ﾎﾞﾙﾄ&ﾜｯｼｬ	10	
4	AG-F1805-10030		BOLT&WASHER	ﾎﾞﾙﾄ&ﾜｯｼｬ	2	
5	AG-34407-11090		SEAL,OIL	ｼｰﾙ	1	A
-	AG-34407-02090		SEAL,OIL	ｼｰﾙ	1	B
6	AG-32A07-06900		STUD	ｽﾀｯﾄﾞ	2	
7	AG-F2300-10000		NUT	ﾅｯﾄ	2	
8	AG-F2515-10000		WASHER	ﾜｯｼｬ	2	
9	AG-32B09-00010		METAL SET,MAIN	ﾒﾀﾙｾｯﾄ	7	STD
-	AG-32B09-00020		METAL SET,MAIN	ﾒﾀﾙｾｯﾄ	7	U.S.=0.25mm
-	AG-32B09-00030		METAL SET,MAIN	ﾒﾀﾙｾｯﾄ	7	U.S.=0.50mm
-	AG-32B09-00040		METAL SET,MAIN	ﾒﾀﾙｾｯﾄ	7	U.S.=0.75mm
10	AG-32B09-08101		PLATE,THRUST	ﾌﾟﾚｰﾄ	3	STD
-	AG-32B09-08201		PLATE,THRUST	ﾌﾟﾚｰﾄ	3	O.S.=0.15mm
-	AG-32B09-08301		PLATE,THRUST	ﾌﾟﾚｰﾄ	3	O.S.=0.30mm

FIG. 4 PISTON & CONNECTING ROD
ﾋﾟｽﾄﾝ&ｺﾈｸﾃｨﾝｸﾞﾛｯﾄﾞ

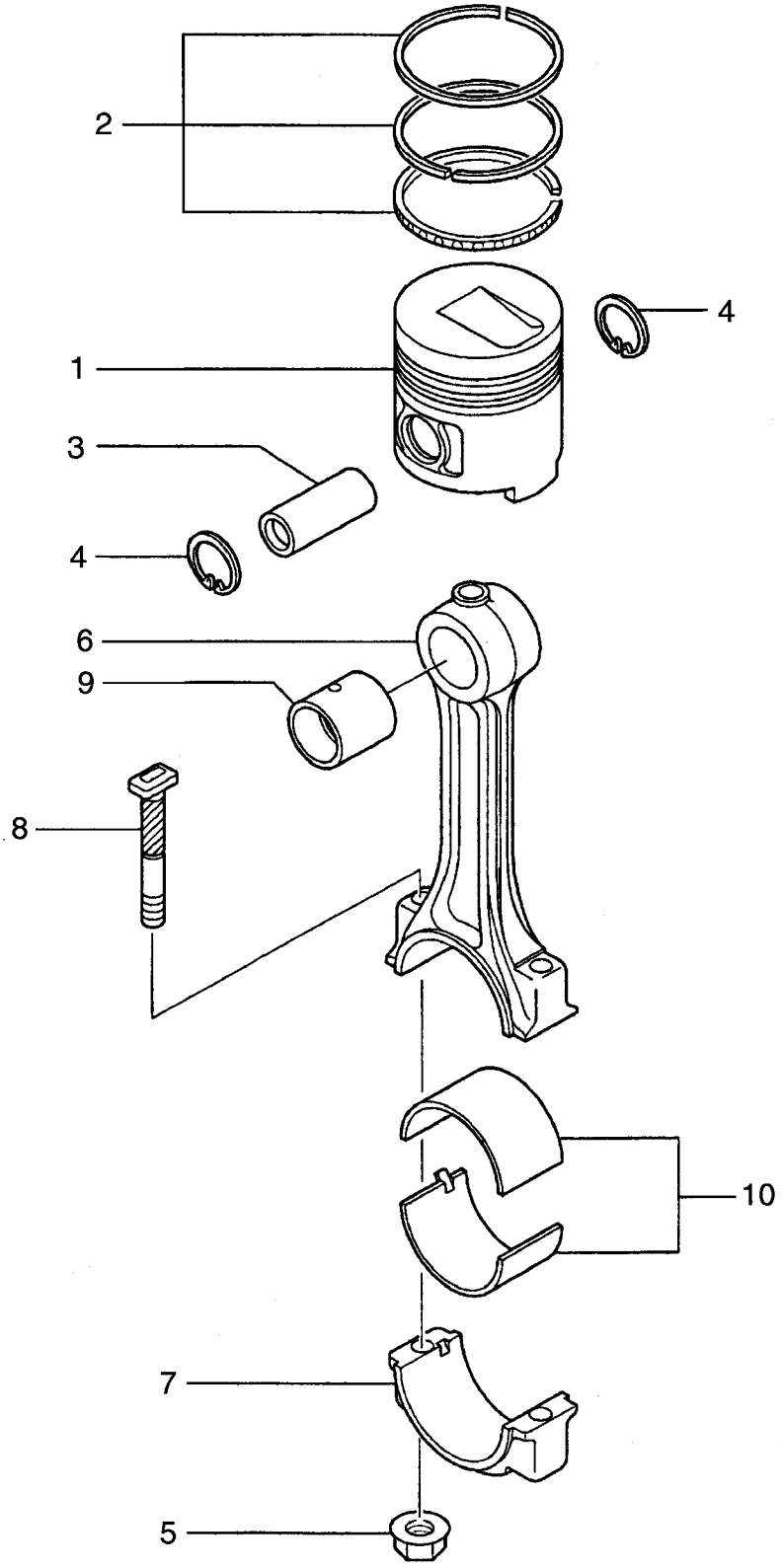

A: S6S-31TFL B: S6S-31TFLW

Item No. 見出番号	Part No. 部品番号	Mark 記号	Description 部品名称		Req'd 個数	Remarks : serial No. 備考：実施号車
1	AG-32A17-10100		PISTON	ﾋﾟｽﾄﾝ	6	STD
-	AG-32A17-10200		PISTON	ﾋﾟｽﾄﾝ	6	O.S.=0.25mm
-	AG-32A17-10300		PISTON	ﾋﾟｽﾄﾝ	6	O.S.=0.50mm
2	AG-32A17-02010		RING,PISTON	ﾘﾝｸﾞ	6	STD
-	AG-32A17-02020		RING,PISTON	ﾘﾝｸﾞ	6	O.S.=0.25mm
-	AG-32A17-02030		RING,PISTON	ﾘﾝｸﾞ	6	O.S.=0.50mm
3	AG-32A17-08300		PIN,PISTON	ﾋﾟﾝ	6	
4	AG-F3202-03000		RING,SNAP	ﾘﾝｸﾞ	12	
A	AG-32A19-00012		CONNECTING ROD ASSY	ｺﾈｸﾃｨﾝｸﾞﾛｯﾄﾞｱｯｾﾝ	6	INC.5-9
5	AG-30619-10501		NUT	ﾅｯﾄ	12	
6	NO PART NO.		ROD,CONNECTING	ﾛｯﾄﾞ	6	
7	NO PART NO.		CAP	ｷｬｯﾌﾟ	6	
8	AG-32A19-00400		BOLT	ﾎﾞﾙﾄ	12	
9	AG-32A19-00501		BUSHING	ﾌﾞｯｼﾝｸﾞ	6	
10	AG-32B19-09011		METAL	ﾒﾀﾙ	1	STD
-	AG-32B19-09021		METAL	ﾒﾀﾙ	1	U.S.=0.25mm
-	AG-32B19-09031		METAL	ﾒﾀﾙ	1	U.S.=0.50mm
-	AG-32B19-09041		METAL	ﾒﾀﾙ	1	U.S.=0.75mm

FIG. 5 CRANKSHAFT & FLYWHEEL
クランクシャフト&フライホイール

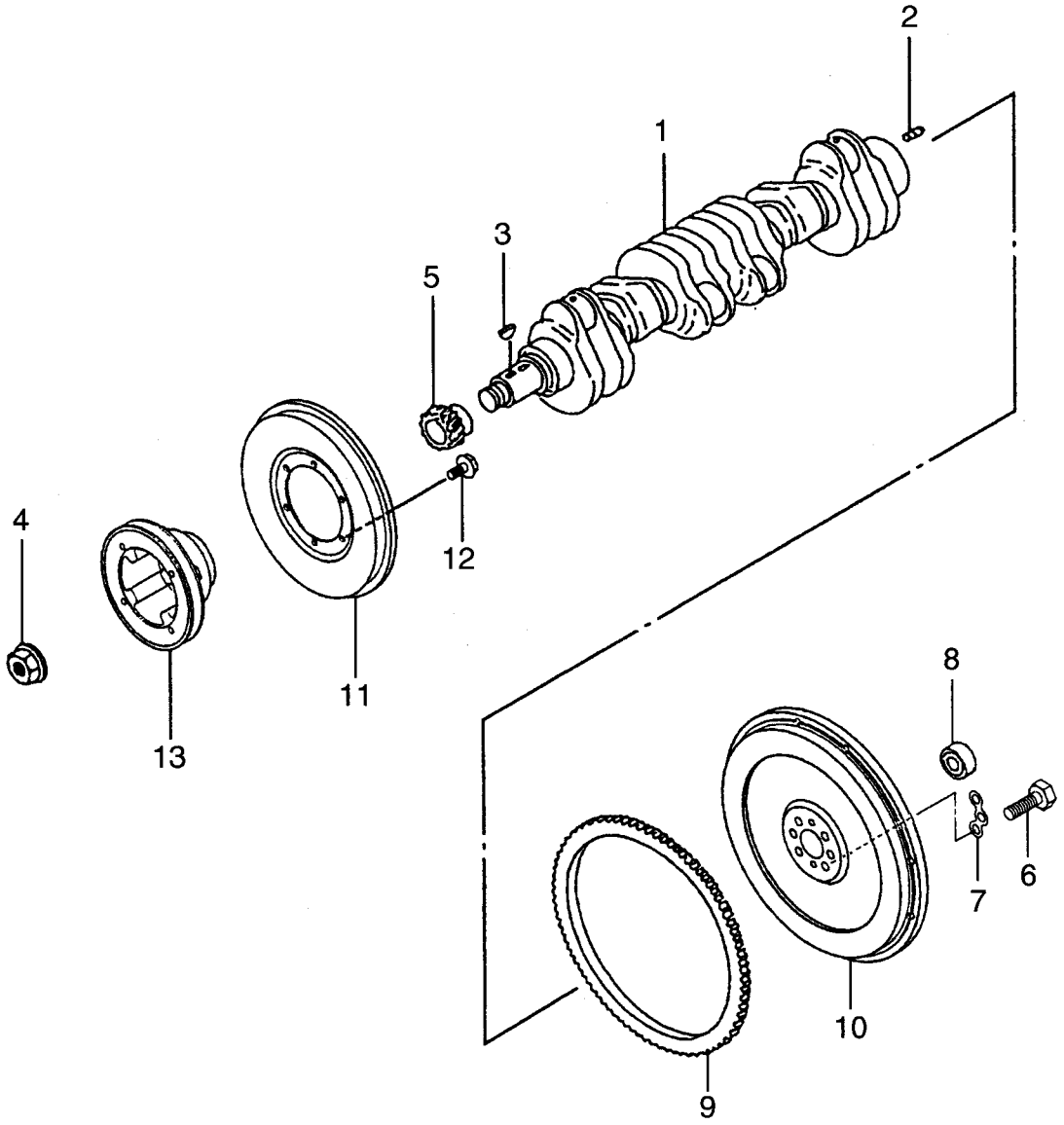

A: S6S-31TFL B: S6S-31TFLW

Item No. 見出番号	Part No. 部品番号	Mark 記号	Description 部品名称		Req'd 個数	Remarks : serial No. 備考：実施号車
A1	AG-32B20-10011		CRANKSHAFT ASSY	ｸﾗﾝｸｼｬﾌﾄｱｯｾﾝ	1	INC.1-5
1	NO PART NO.		CRANKSHAFT	ｸﾗﾝｸｼｬﾌﾄ	1	
2	AG-F2846-10000		PIN,DOWEL	ﾋﾟﾝ	2	
3	AG-F2870-07022		KEY,WOODRUFF	ｷｰ	2	
4	AG-32A20-02901		NUT	ﾅｯﾄ	1	
5	AG-32A23-00101		GEAR	ｷﾞﾔｰ	1	Z=23
6	AG-F1035-12045		BOLT	ﾎﾞﾙﾄ	6	
7	AG-34721-03700		WASHER	ﾜｯｼｬ	2	
8	AG-34721-03200		BEARING,BALL	ﾍﾞｱﾘﾝｸﾞ	1	
A2	AG-32B21-10030		FLYWHEEL ASSY	ﾌﾗｲﾎｲｰﾙｱｯｾﾝ	1	A INC.9,10
-	AG-32B21-06010		FLYWHEEL ASSY	ﾌﾗｲﾎｲｰﾙｱｯｾﾝ	1	B INC.9,10
9	AG-32A21-00900		GEAR,RING	ｷﾞﾔｰ	1	Z=122
10	NO PART NO.		FLYWHEEL	ﾌﾗｲﾎｲｰﾙ	1	
11	AG-32B22-00100		DAMPER	ﾀﾞﾝﾊﾟ	1	
12	AG-32B22-00800		BOLT	ﾎﾞﾙﾄ	6	
13	AG-32B20-01501		PULLEY	ﾌﾟｰﾘ	1	

FIG. 6 TIMING GEAR CASE
タイミング ギ ヤーケース

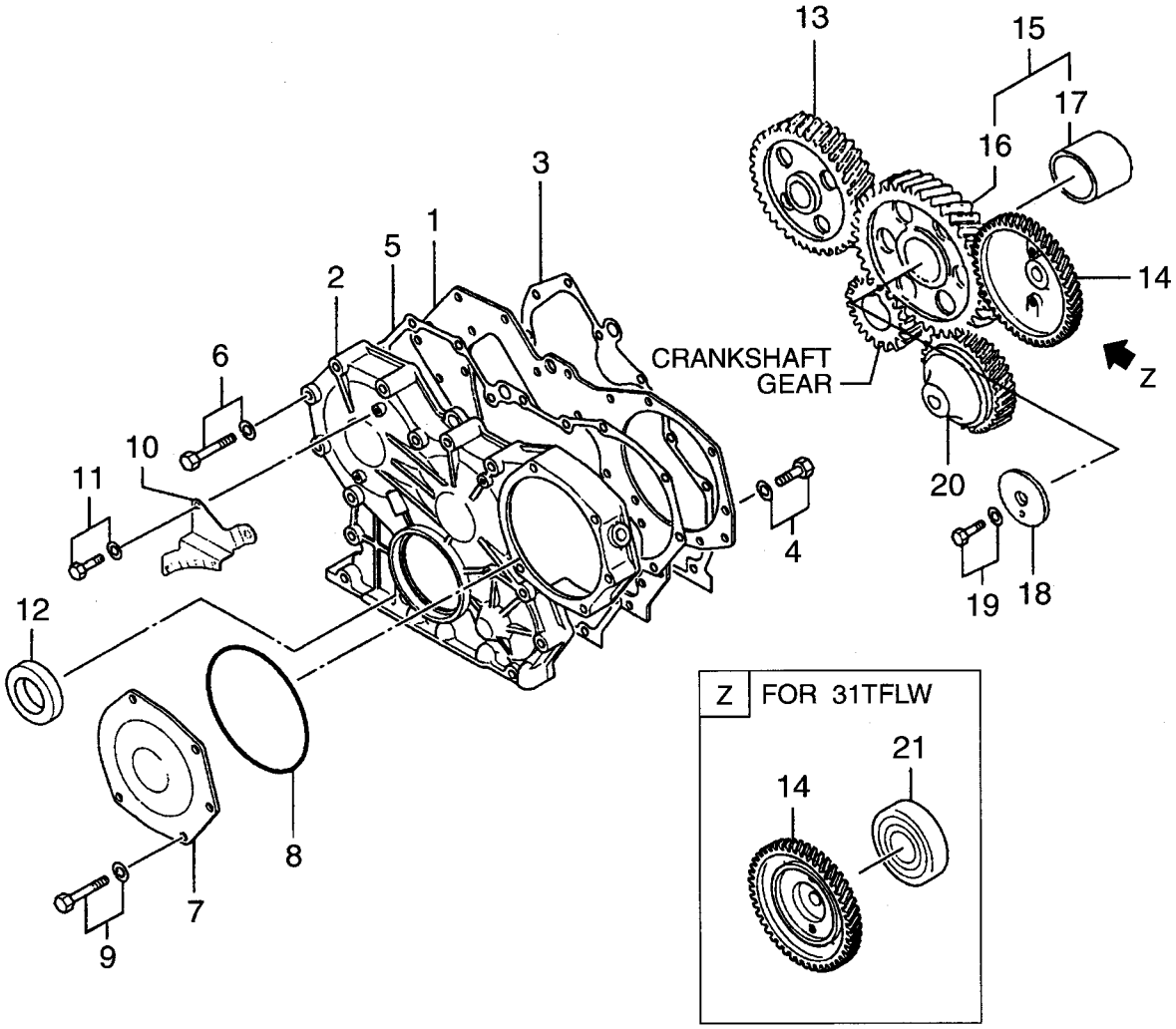

A: S6S-31TFL B: S6S-31TFLW

Item No. 見出番号	Part No. 部品番号	Mark 記号	Description 部品名称		Req'd 個数	Remarks : serial No. 備考：実施号車
1	AG-32A11-03100		PLATE,FRONT	ﾌﾟﾚｰﾄ	1	
2	AG-32A11-00105		CASE,TIMING GEAR	ｹｰｽ	1	
3	AG-32A07-04100		GASKET	ｶﾞｽｹｯﾄ	1	
4	AG-F1805-08016		BOLT&WASHER	ﾎﾞﾙﾄ&ﾜｯｼｬ	5	
5	AG-32A11-00200		GASKET	ｶﾞｽｹｯﾄ	1	
6	AG-MF241264		BOLT&WASHER	ﾎﾞﾙﾄ&ﾜｯｼｬ	11	
7	AG-32A11-01100		COVER,TIMING GEAR	ｶﾊﾞｰ	1	
8	AG-06016-13140		O RING	Oﾘﾝｸﾞ	1	
9	AG-MF241266		BOLT&WASHER	ﾎﾞﾙﾄ&ﾜｯｼｬ	5	
10	AG-32A11-01600		PLATE,POINTER	ﾌﾟﾚｰﾄ	1	
11	AG-F1805-06010		BOLT&WASHER	ﾎﾞﾙﾄ&ﾜｯｼｬ	1	
12	AG-F3015-07023		SEAL,OIL	ｼｰﾙ	1	
13	AG-32A23-01100		GEAR,CAMSHAFT	ｷﾞﾔｰ	1	Z=46
14	AG-32A23-05400		GEAR,INJECTION PUMP	ｷﾞﾔｰ	1	A Z=46
-	AG-32B23-02300		GEAR,INJECTION PUMP	ｷﾞﾔｰ	1	B Z=46
15	AG-32A23-03010		GEAR,IDLER	ｷﾞﾔｰ	1	INC.16,17
16	NO PART NO.		GEAR	ｷﾞﾔｰ	1	
17	NO PART NO.		BUSHING	ﾌﾞｯｼﾝｸﾞ	1	
18	AG-34323-00801		PLATE,THRUST	ﾌﾟﾚｰﾄ	1	
19	AG-F1805-10020		BOLT&WASHER	ﾎﾞﾙﾄ&ﾜｯｼｬ	1	
20	AG-32A35-12101		GEAR,OIL PUMP	ｷﾞﾔｰ	1	Z=31
21	AG-05640-06909		BEARING,BALL	ﾍﾞｱﾘﾝｸﾞ	1	B

FIG. 7 OIL PAN
オイルパン

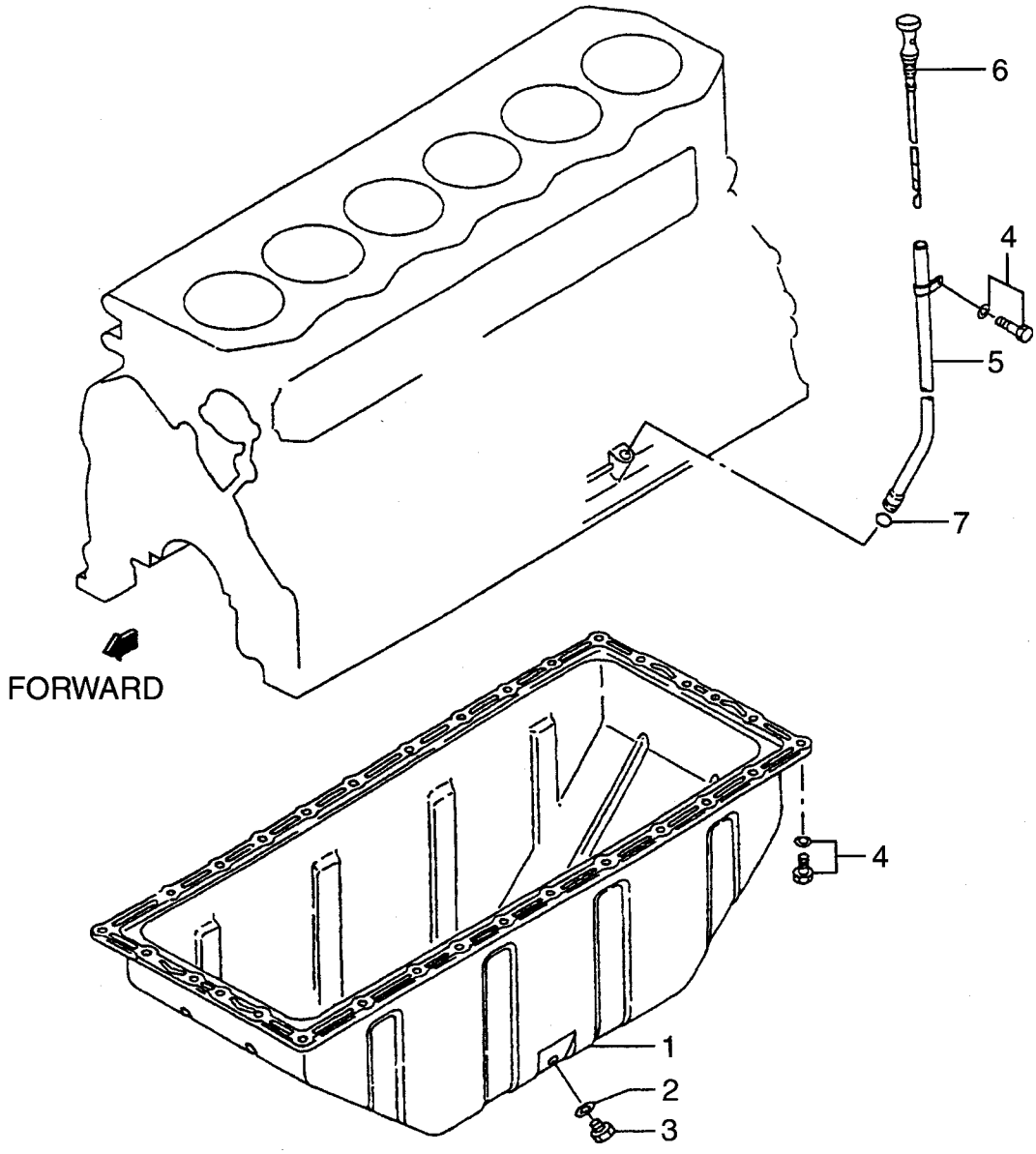

A: S6S-31TFL B: S6S-31TFLW

Item No. 見出番号	Part No. 部品番号	Mark 記号	Description 部品名称		Req'd 個数	Remarks : serial No. 備考：実施号車
1	AG-32B13-00010		PAN,OIL	ﾊﾟﾝ	1	INC.2,3
2	AG-F4202-20000		GASKET	ｶﾞｽｹｯﾄ	1	
3	AG-32B13-00200		PLUG,DRAIN	ﾌﾟﾗｸﾞ	1	
4	AG-F1805-08016		BOLT&WASHER	ﾎﾞﾙﾄ&ﾜｯｼｬ	31	
5	AG-32B42-20100		GUIDE,LEVEL GAUGE	ｶﾞｲﾄﾞ	1	
6	AG-32B42-12101		GAUGE,OIL LEVEL	ｹﾞｰｼﾞ	1	
7	AG-05507-10110		O RING	Oﾘﾝｸﾞ	1	

FIG. 8 CYLINDER HEAD
シリンダヘッド

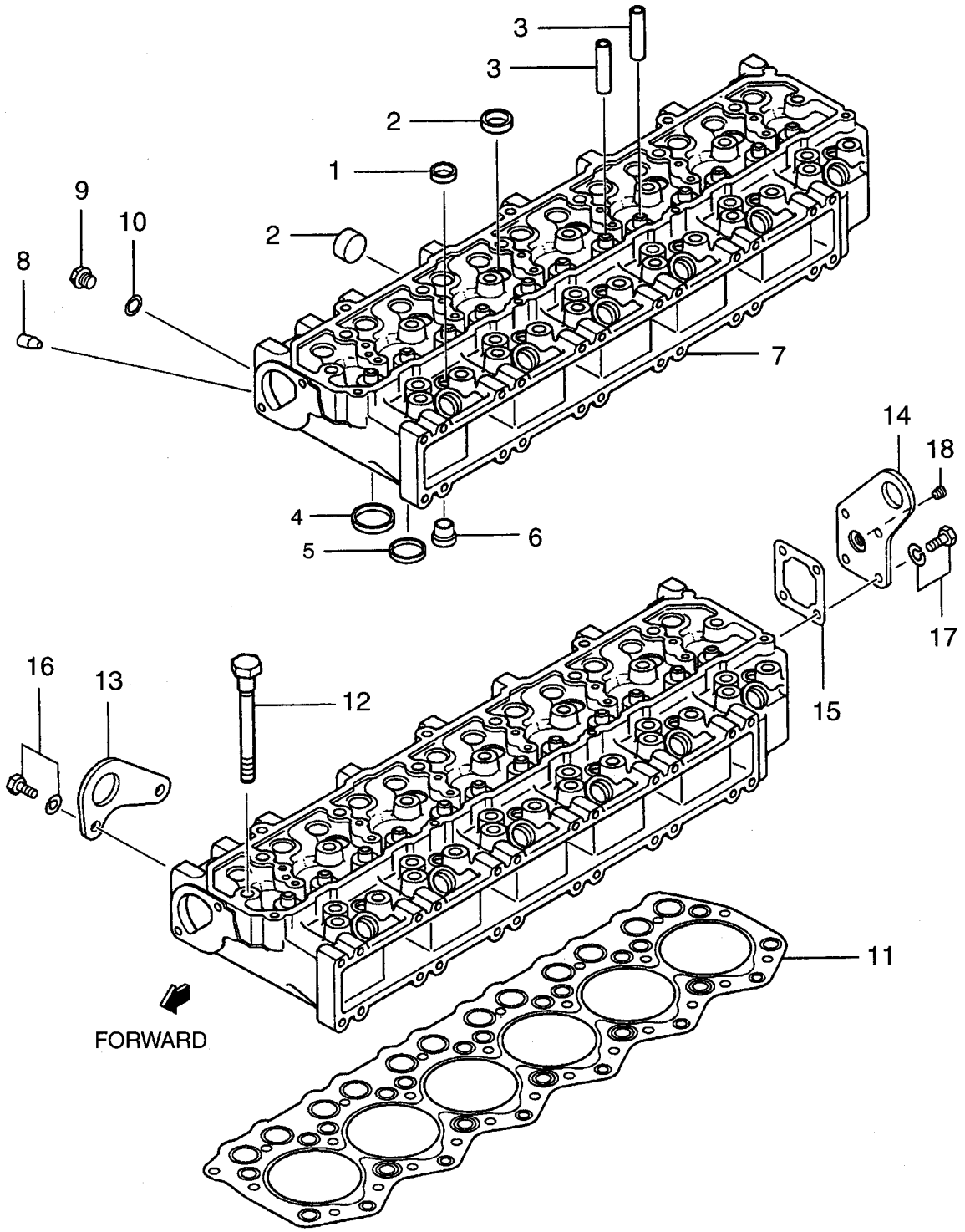

A: S6S-31TFL B: S6S-31TFLW

Item No. 見出番号	Part No. 部品番号	Mark 記号	Description 部品名称		Req'd 個数	Remarks : serial No. 備考：実施号車
A1	AG-32B01-01011		CYLINDER HEAD ASSY	ｼﾘﾝﾀﾞﾍｯﾄﾞｱｯｾﾝ	1	INC.1-10
A2	NO PART NO.		SUB ASSY	ｻﾌﾞｱｯｾﾝ	1	INC.1-7
1	AG-04826-22000		CAP,SEALING	ｷｬｯﾌﾟ	12	
2	AG-04826-22500		CAP,SEALING	ｷｬｯﾌﾟ	11	
3	AG-32A01-01600		GUIDE,VALVE	ｶﾞｲﾄﾞ	12	
4	AG-32A01-03100		SEAT,INLET VALVE	ｼｰﾄ	6	
5	AG-32A01-03200		SEAT,EXHAUST VALVE	ｼｰﾄ	6	
6	AG-32A03-01100		JET,COMBUSTION	ｼﾞｪｯﾄ	6	
7	NO PART NO.		HEAD,CYLINDER	ﾍｯﾄﾞ	1	
8	NO PART NO.		PLUG	ﾌﾟﾗｸﾞ	1	
9	AG-MM316248		PLUG,DRAIN	ﾌﾟﾗｸﾞ	1	
10	AG-30636-25901		GASKET	ｶﾞｽｹｯﾄ	1	
11	AG-32B01-12100		GASKET	ｶﾞｽｹｯﾄ	1	
12	AG-32A01-01400		BOLT	ﾎﾞﾙﾄ	25	
13	AG-32A01-02700		EYE,LIFTING,FRONT	ｱｲ	1	
14	AG-32A01-02091		EYE,LIFTING,REAR	ｱｲ	1	INC.18
15	AG-32A01-02501		GASKET	ｶﾞｽｹｯﾄ	1	
16	AG-F1805-08016		BOLT&WASHER	ﾎﾞﾙﾄ&ﾜｯｼｬ	2	
17	AG-F1805-08020		BOLT&WASHER	ﾎﾞﾙﾄ&ﾜｯｼｬ	4	
18	AG-F5005-17001		PLUG	ﾌﾟﾗｸﾞ	1	

FIG. 9 ROCKER COVER & CAMSHAFT
ﾛｯｶｶﾊﾞｰ&ｶﾑｼｬﾌﾄ

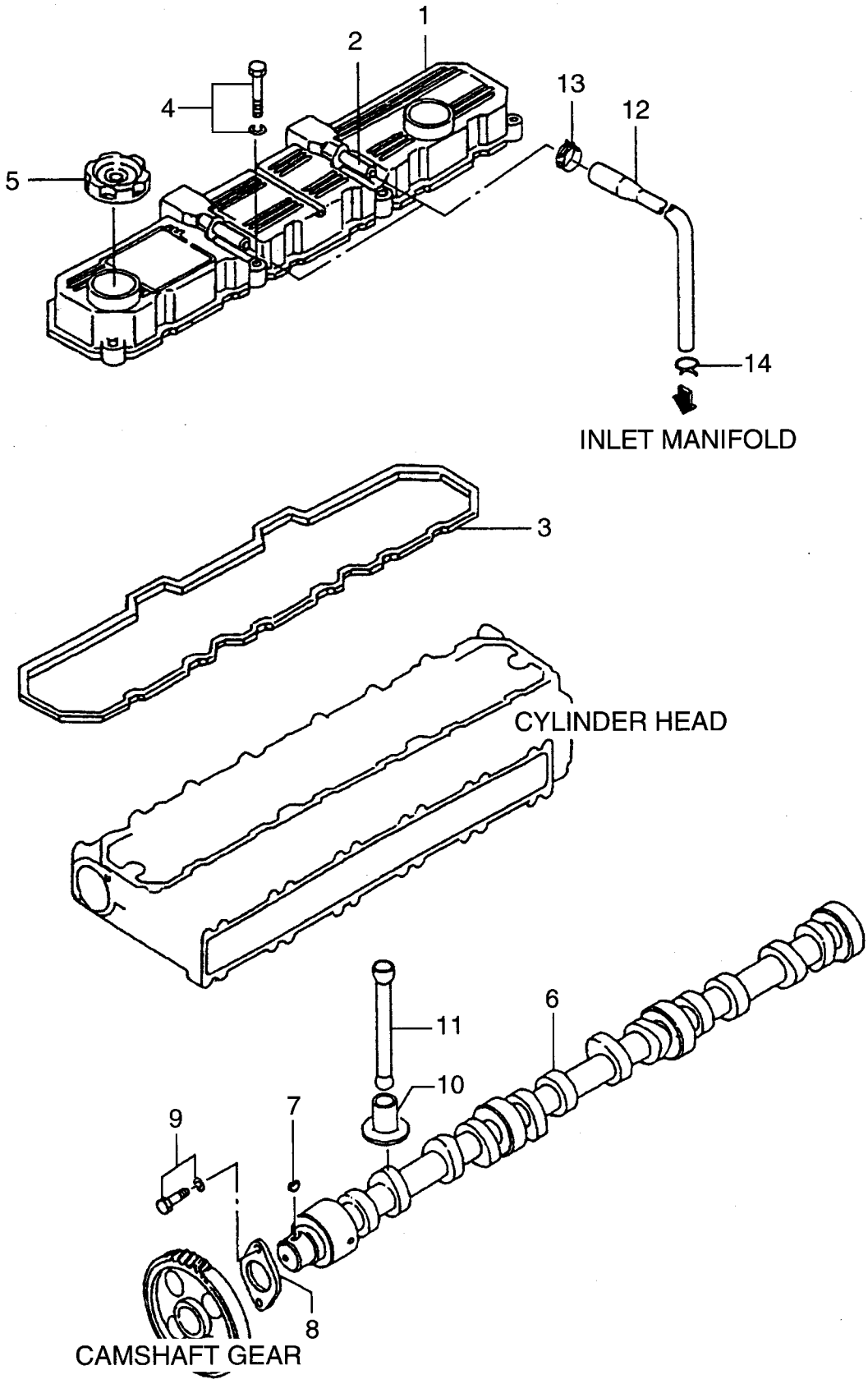

A: S6S-31TFL B: S6S-31TFLW

Item No. 見出番号	Part No. 部品番号	Mark 記号	Description 部品名称		Req'd 個数	Remarks : serial No. 備考：実施号車
1	AG-32B04-03010		COVER,ROCKER	ｶﾊﾞｰ	1	INC.2
2	NO PART NO.		PIPE	ﾊﾟｲﾌﾟ	1	
3	AG-32B04-03200		GASKET	ｶﾞｽｹｯﾄ	1	
4	AG-F1805-08040		BOLT&WASHER	ﾎﾞﾙﾄ&ﾜｯｼｬ	7	
5	AG-MD008784		CAP,OIL FILLER	ｷｬｯﾌﾟ	2	
6	AG-32B05-00101		CAMSHAFT	ｶﾑｼｬﾌﾄ	1	
7	AG-F2870-07022		KEY,WOODRUFF	ｷｰ	1	
8	AG-34405-00800		PLATE,THRUST	ﾌﾟﾚｰﾄ	1	
9	AG-F1805-08016		BOLT&WASHER	ﾎﾞﾙﾄ&ﾜｯｼｬ	2	
10	AG-32A05-02101		TAPPET	ﾀﾍﾟｯﾄ	12	
11	AG-32A05-13100		ROD,PUSH	ﾛｯﾄﾞ	12	
12	AG-32B43-11700		HOSE,BREATHER	ﾎｰｽ	2	
13	AG-MS660174		CLIP,HOSE	ｸﾘｯﾌﾟ	2	
14	AG-30446-06300		CLAMP	ｸﾗﾝﾌﾟ	2	

FIG. 10 VALVE MECHANISM
ﾊﾞﾙﾌﾞﾒｶﾆｽﾞﾑ

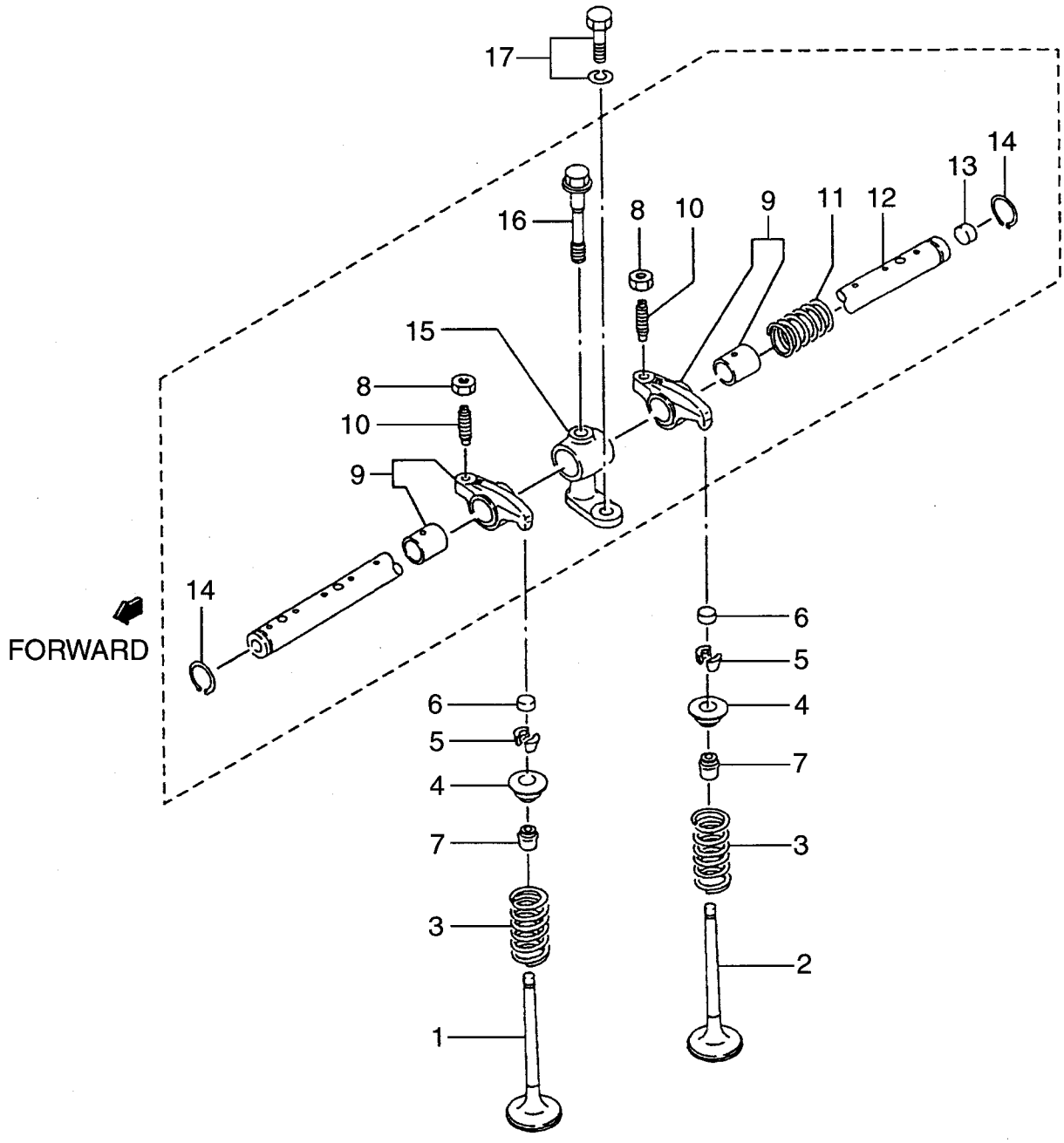

A: S6S-31TFL B: S6S-31TFLW

Item No. 見出番号	Part No. 部品番号	Mark 記号	Description 部品名称		Req'd 個数	Remarks : serial No. 備考：実施号車
1	AG-32A04-00202		VALVE,INLET	ﾊﾞﾙﾌﾞ	6	
2	AG-32A04-01202		VALVE,EXHAUST	ﾊﾞﾙﾌﾞ	6	
3	AG-30604-21402		SPRING,VALVE	ｽﾌﾟﾘﾝｸﾞ	12	
4	AG-30604-31601		RETAINER,UPPER	ﾘﾃｰﾅ	12	
5	AG-34404-02901		COTTER,VALVE	ｺｯﾀ	24	
6	AG-31304-11700		CAP	ｷｬｯﾌﾟ	12	
7	AG-32A04-02801		SEAL,VALVE STEM	ｼｰﾙ	12	
A1	NO PART NO.		ROCKER & SHAFT ASSY	ﾛｯｶ & ｼｬﾌﾄｱｯｾﾝ	1	INC.8-16
A2	AG-32A04-22010		ROCKER ASSY	ﾛｯｶｱｯｾﾝ	12	INC.8-10
8	AG-F2325-08000		NUT	ﾅｯﾄ	12	
9	NO PART NO.		ROCKER & BUSHING	ﾛｯｶ & ﾌﾞｯｼﾝｸﾞ	12	
10	AG-32A04-02401		SCREW	ｽｸﾘｭ	12	
11	AG-32C04-04501		SPRING,VALVE	ｽﾌﾟﾘﾝｸﾞ	5	
A3	AG-32B04-04011		ROCKER SHAFT ASSY	ﾛｯｶｼｬﾌﾄｱｯｾﾝ	1	INC.12,13
12	NO PART NO.		SHAFT,ROCKER	ｼｬﾌﾄ	1	
13	AG-04826-21200		CAP,SEALING	ｷｬｯﾌﾟ	2	
14	AG-MF522010		RING,SNAP	ﾘﾝｸﾞ	2	
15	AG-32A04-04701		BRACKET	ﾌﾞﾗｹｯﾄ	6	
16	AG-32A04-04801		BOLT	ﾎﾞﾙﾄ	6	
17	AG-F1805-08025		BOLT&WASHER	ﾎﾞﾙﾄ&ﾜｯｼｬ	6	

FIG. 11 INLET & EXHAUST SYSTEM
インレット&エキゾーストシステム

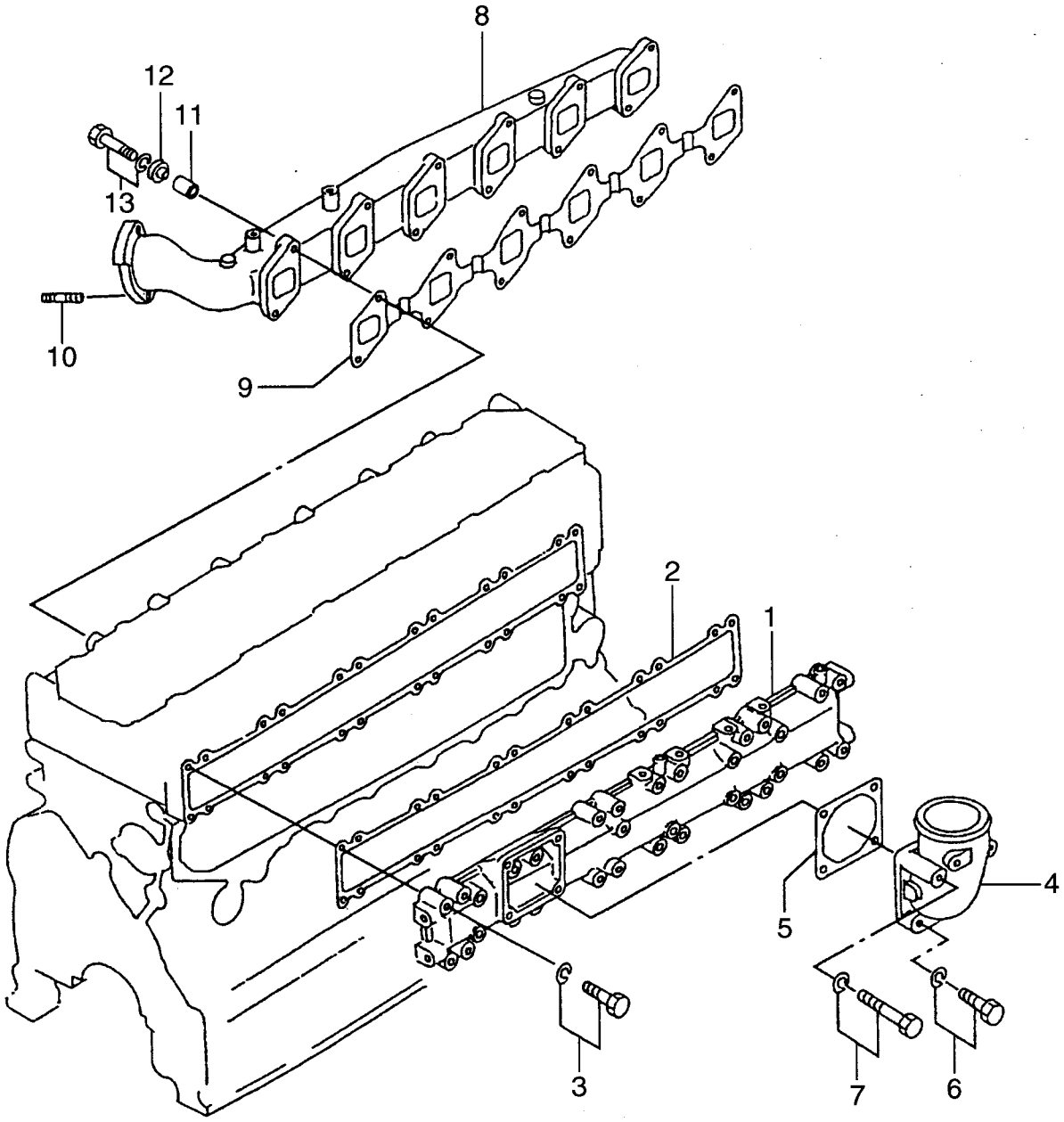

A: S6S-31TFL B: S6S-31TFLW

Item No. 見出番号	Part No. 部品番号	Mark 記号	Description 部品名称		Req'd 個数	Remarks : serial No. 備考：実施号車
1	AG-32B30-10090		MANIFOLD,INLET	ﾏﾆﾎｰﾙﾄﾞ	1	
2	AG-32B30-00201		GASKET	ｶﾞｽｹｯﾄ	1	
3	AG-F1805-08040		BOLT&WASHER	ﾎﾞﾙﾄ&ﾜｯｼｬ	24	
4	AG-32B30-01102		ELBOW	ｴﾙﾎﾞ	1	
5	AG-34330-04300		GASKET	ｶﾞｽｹｯﾄ	1	
6	AG-F1805-08020		BOLT&WASHER	ﾎﾞﾙﾄ&ﾜｯｼｬ	2	
7	AG-MF241266		BOLT&WASHER	ﾎﾞﾙﾄ&ﾜｯｼｬ	2	
8	AG-32B32-00600		MANIFOLD,EXHAUST	ﾏﾆﾎｰﾙﾄﾞ	1	
9	AG-32B32-00200		GASKET	ｶﾞｽｹｯﾄ	1	
10	AG-F1450-10020		STUD	ｽﾀｯﾄﾞ	2	
11	AG-32B32-00901		SPACER	ｽﾍﾟｰｻ	12	
12	AG-34332-31300		WASHER	ﾜｯｼｬ	12	
13	AG-F1805-08050		BOLT&WASHER	ﾎﾞﾙﾄ&ﾜｯｼｬ	12	

FIG. 12 OIL SYSTEM
オイルシステム

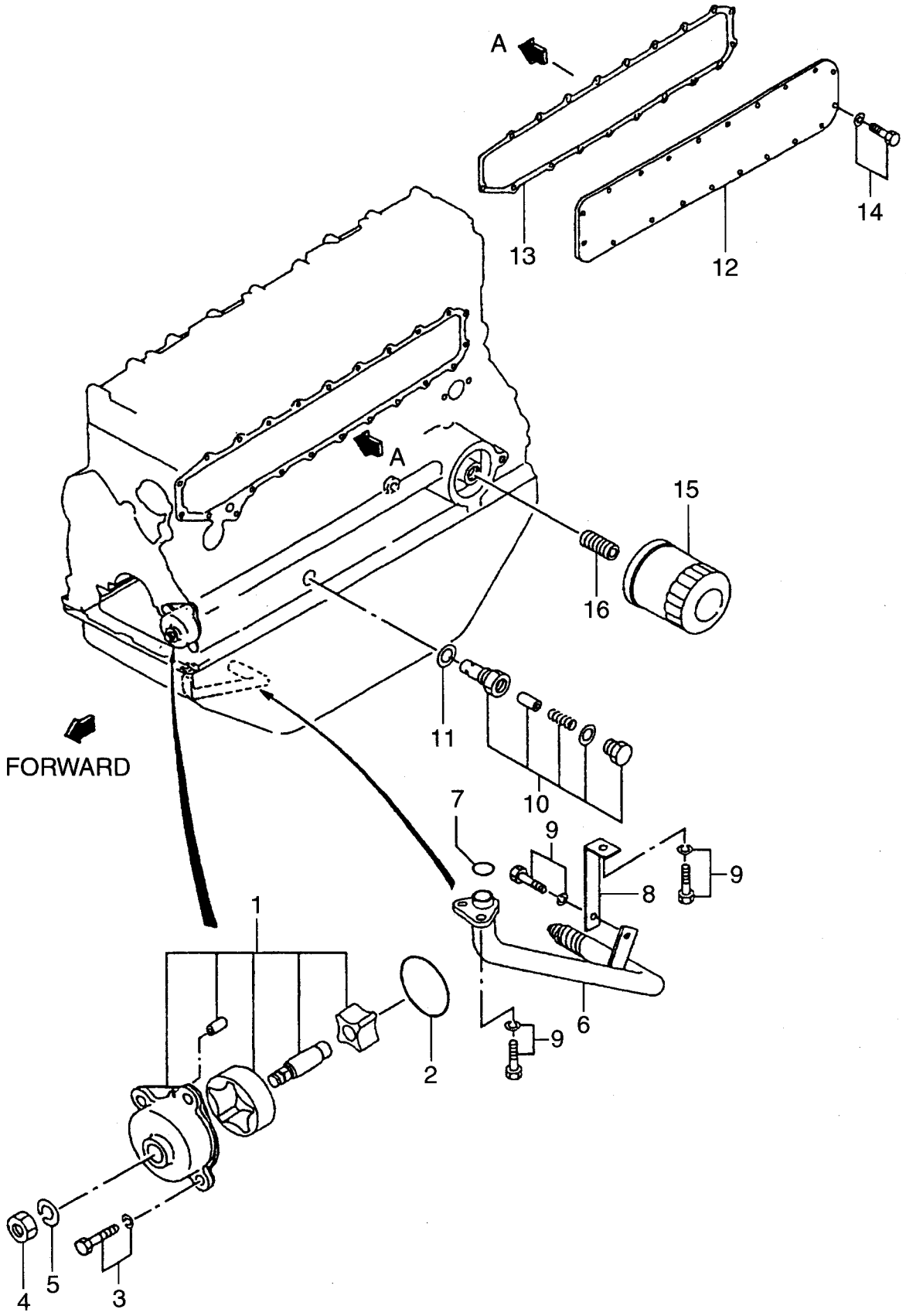

A: S6S-31TFL B: S6S-31TFLW

Item No. 見出番号	Part No. 部品番号	Mark 記号	Description 部品名称		Req'd 個数	Remarks : serial No. 備考：実施号車
1	AG-32B35-00012		PUMP,OIL	ﾎﾟﾝﾌﾟ	1	
2	AG-32A35-00600		O RING	Oﾘﾝｸﾞ	1	
3	AG-F1805-08020		BOLT&WASHER	ﾎﾞﾙﾄ&ﾜｯｼｬ	4	
4	AG-F2320-10000		NUT	ﾅｯﾄ	1	
5	AG-F2515-10000		WASHER	ﾜｯｼｬ	1	
6	AG-32B35-15100		STRAINER,OIL	ｽﾄﾚｰﾅ	1	
7	AG-F3150-02000		O RING	Oﾘﾝｸﾞ	1	
8	AG-32B35-06200		STAY	ｽﾃｰ	1	
9	AG-F1805-08016		BOLT&WASHER	ﾎﾞﾙﾄ&ﾜｯｼｬ	4	
10	AG-32A36-05012		VALVE,RELIEF	ﾊﾞﾙﾌﾞ	1	
11	AG-34340-00700		GASKET	ｶﾞｽｹｯﾄ	1	
12	AG-32B39-01100		COVER,SIDE	ｶﾊﾞｰ	1	
13	AG-32B39-01200		GASKET	ｶﾞｽｹｯﾄ	1	
14	AG-F1805-08016		BOLT&WASHER	ﾎﾞﾙﾄ&ﾜｯｼｬ	23	
15	AG-32B40-00100		CARTRIDGE	ｶｰﾄﾘｯｼﾞ	1	
16	AG-32A40-01100		UNION	ﾕﾆｵﾝ	1	

FIG. 13 COOLING SYSTEM
クーリング゛システム

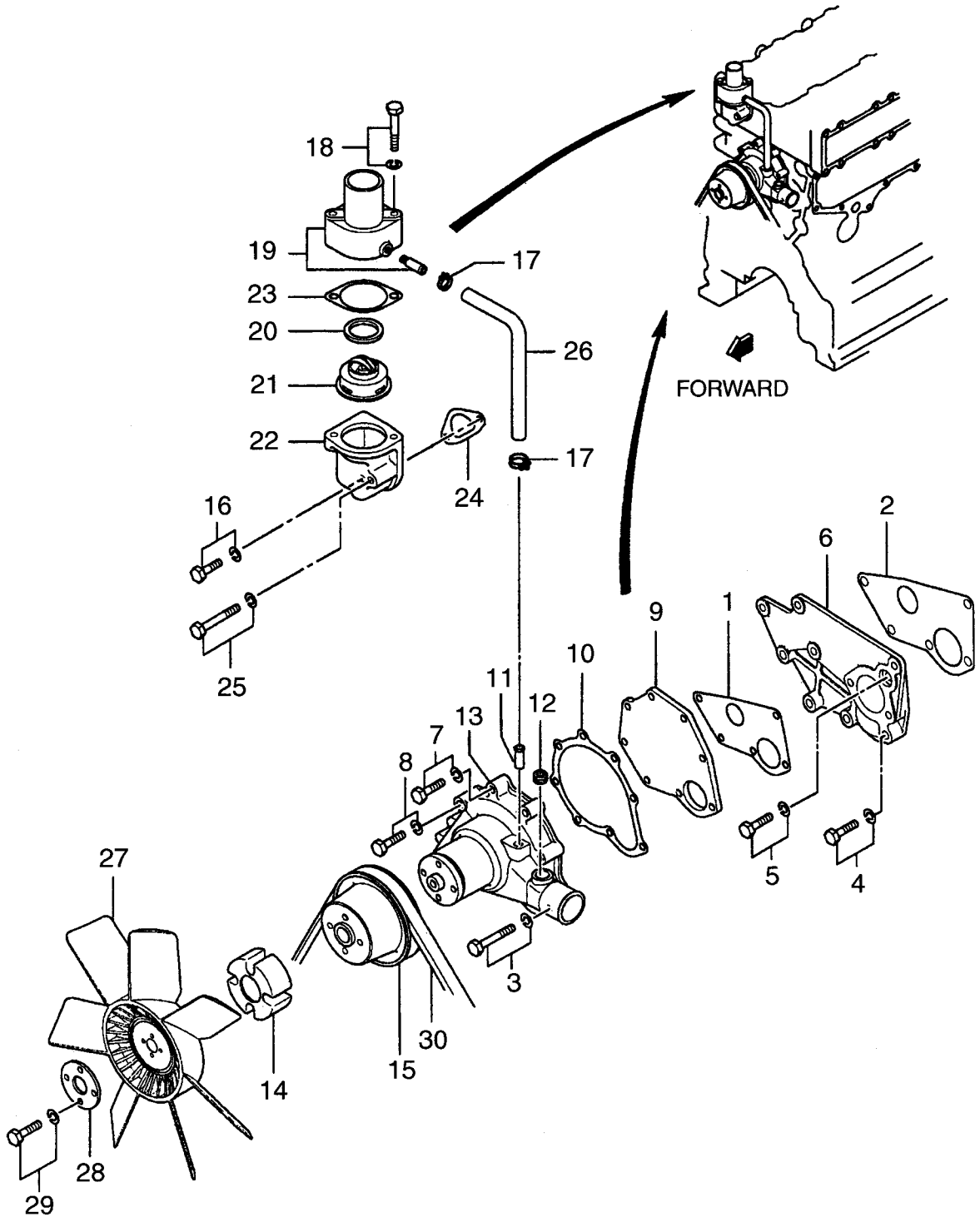

A: S6S-31TFL B: S6S-31TFLW

Item No. 見出番号	Part No. 部品番号	Mark 記号	Description 部品名称		Req'd 個数	Remarks : serial No. 備考：実施号車
1	AG-32A45-00500		GASKET	ｶﾞｽｹｯﾄ	1	
2	AG-32B45-05500		GASKET	ｶﾞｽｹｯﾄ	1	
3	AG-F1805-08045		BOLT&WASHER	ﾎﾞﾙﾄ&ﾜｯｼｬ	5	
4	AG-F1805-08050		BOLT&WASHER	ﾎﾞﾙﾄ&ﾜｯｼｬ	4	
5	AG-F1805-08040		BOLT&WASHER	ﾎﾞﾙﾄ&ﾜｯｼｬ	1	
6	AG-32B45-00901		SPACER	ｽﾍﾟｰｻ	1	
A1	AG-32B45-10031		WATER PUMP ASSY	ｳｫｰﾀｰﾎﾟﾝﾌﾟｱｯｾﾝ	1	INC.7-13
7	AG-F1805-08025		BOLT&WASHER	ﾎﾞﾙﾄ&ﾜｯｼｬ	2	
8	AG-F1805-08035		BOLT&WASHER	ﾎﾞﾙﾄ&ﾜｯｼｬ	1	
9	AG-32A45-00300		COVER	ｶﾊﾞｰ	1	
10	AG-32A45-00400		GASKET	ｶﾞｽｹｯﾄ	1	
11	NO PART NO.		PIPE	ﾊﾟｲﾌﾟ	1	
12	NO PART NO.		PLUG	ﾌﾟﾗｸﾞ	1	
13	NO PART NO.		CASE	ｹｰｽ	1	
14	AG-32C48-01101		SPACER	ｽﾍﾟｰｻ	1	
15	AG-32B45-04100		PULLEY	ﾌﾟｰﾘ	1	
16	AG-F1805-08045		BOLT&WASHER	ﾎﾞﾙﾄ&ﾜｯｼｬ	1	
17	AG-32A46-03100		CLAMP	ｸﾗﾝﾌﾟ	2	
A2	AG-32B46-00030		THERMOSTAT ASSY	ｻｰﾓｽﾀｯﾄｱｯｾﾝ	1	INC.18-23
18	AG-F1805-08045		BOLT&WASHER	ﾎﾞﾙﾄ&ﾜｯｼｬ	2	
19	AG-30646-25064		COVER	ｶﾊﾞｰ	1	
20	AG-31346-11900		GASKET	ｶﾞｽｹｯﾄ	1	
21	AG-31646-02200		THERMOSTAT	ｻｰﾓｽﾀｯﾄ	1	
22	AG-32B46-00301		CASE,THERMOSTAT	ｹｰｽ	1	
23	AG-34446-05300		GASKET	ｶﾞｽｹｯﾄ	1	
24	AG-32B46-00200		GASKET	ｶﾞｽｹｯﾄ	1	
25	AG-F1805-08070		BOLT&WASHER	ﾎﾞﾙﾄ&ﾜｯｼｬ	1	
26	AG-32B46-01100		HOSE,WATER	ﾎｰｽ	1	
27	AG-32B48-00100		FAN,COOLING	ﾌｧﾝ	1	
28	AG-31345-12100		PLATE	ﾌﾟﾚｰﾄ	1	
29	AG-F1805-08045		BOLT&WASHER	ﾎﾞﾙﾄ&ﾜｯｼｬ	4	
30	AG-05910-20049		BELT	ﾍﾞﾙﾄ	1	

FIG. 14 FUEL SYSTEM
フューエルシステム

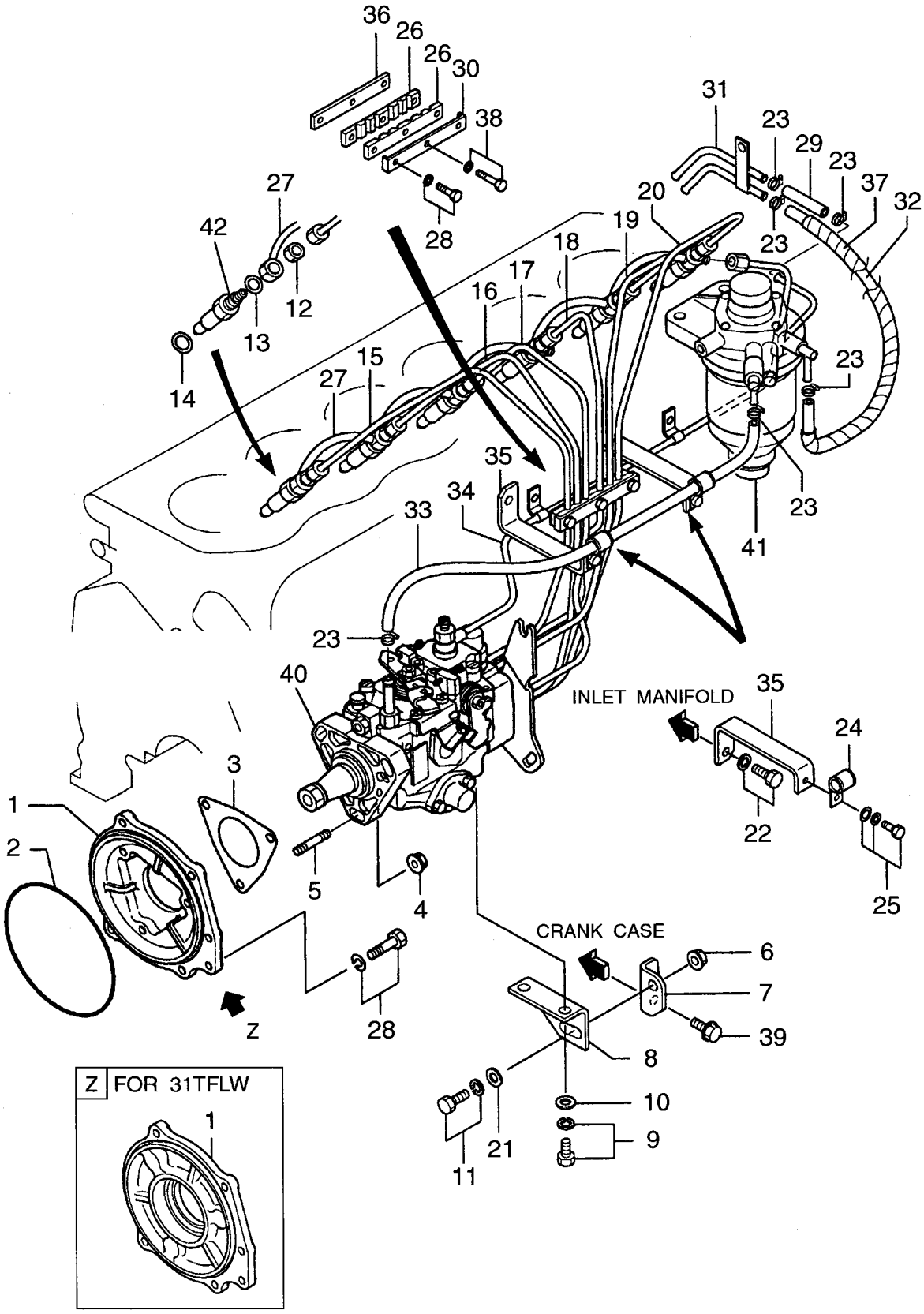

A: S6S-31TFL B: S6S-31TFLW

Item No. 見出番号	Part No. 部品番号	Mark 記号	Description 部品名称		Req'd 個数	Remarks : serial No. 備考：実施号車
1	AG-32A61-01101		FLANGE	ﾌﾗﾝｼﾞ	1	A
-	AG-32B61-01602		FLANGE	ﾌﾗﾝｼﾞ	1	B
2	AG-06016-13140		O RING	Oﾘﾝｸﾞ	1	
3	AG-30461-71601		GASKET	ｶﾞｽｹｯﾄ	1	
4	AG-05633-30800		NUT	ﾅｯﾄ	3	
5	AG-MS401429		STUD	ｽﾀｯﾄﾞ	3	
6	AG-05633-31000		NUT	ﾅｯﾄ	1	
7	AG-32B61-03801		BRACKET	ﾌﾞﾗｹｯﾄ	1	
8	AG-32A61-08800		BRACKET	ﾌﾞﾗｹｯﾄ	1	
9	AG-F2005-10020		BOLT&WASHER	ﾎﾞﾙﾄ&ﾜｯｼｬ	2	
10	AG-F2500-10000		WASHER	ﾜｯｼｬ	2	
11	AG-F1805-10025		BOLT&WASHER	ﾎﾞﾙﾄ&ﾜｯｼｬ	1	
12	AG-MD068353		NUT	ﾅｯﾄ	6	
13	AG-MD068355		GASKET	ｶﾞｽｹｯﾄ	6	
14	AG-MD070717		GASKET	ｶﾞｽｹｯﾄ	6	
15	AG-32B61-50100		PIPE,NO.1	ﾊﾟｲﾌﾟ	1	
16	AG-32B61-50200		PIPE,NO.2	ﾊﾟｲﾌﾟ	1	
17	AG-32B61-50300		PIPE,NO.3	ﾊﾟｲﾌﾟ	1	
18	AG-32B61-50400		PIPE,NO.4	ﾊﾟｲﾌﾟ	1	
19	AG-32B61-50500		PIPE,NO.5	ﾊﾟｲﾌﾟ	1	
20	AG-32B61-50600		PIPE,NO.6	ﾊﾟｲﾌﾟ	1	
21	AG-32A61-09600		WASHER	ﾜｯｼｬ	1	
22	AG-F1805-08016		BOLT&WASHER	ﾎﾞﾙﾄ&ﾜｯｼｬ	2	
23	AG-F4300-01200		CLAMP	ｸﾗﾝﾌﾟ	6	
24	AG-MH020804		CLIP	ｸﾘｯﾌﾟ	2	
25	AG-F1825-06014		BOLT&WASHER	ﾎﾞﾙﾄ&ﾜｯｼｬ	2	
26	AG-32161-13700		SEAT	ｼｰﾄ	2	
27	AG-32B61-04100		PIPE,LEAK OFF	ﾊﾟｲﾌﾟ	1	
28	AG-F1805-08020		BOLT&WASHER	ﾎﾞﾙﾄ&ﾜｯｼｬ	3	
29	AG-MS602007		HOSE	ﾎｰｽ	1	
30	AG-32161-13400		CLAMP	ｸﾗﾝﾌﾟ	1	
31	AG-32A61-03200		PIPE	ﾊﾟｲﾌﾟ	1	
32	AG-92364-02500		HOSE	ﾎｰｽ	1	
33	AG-32B61-03400		HOSE	ﾎｰｽ	1	
34	AG-32B61-50700		PIPE,RETURN	ﾊﾟｲﾌﾟ	1	
35	AG-32B61-16901		STAY	ｽﾃｰ	2	
36	AG-34761-08800		PLATE	ﾌﾟﾚｰﾄ	1	
37	AG-05379-23024		TUBE	ﾁｭｰﾌﾞ	1	
38	AG-F1805-08028		BOLT&WASHER	ﾎﾞﾙﾄ&ﾜｯｼｬ	1	
39	AG-32B22-00800		BOLT	ﾎﾞﾙﾄ	1	
40	AG-32B65-00510		INJECTION PUMP	ｲﾝｼﾞｪｸｼｮﾝﾎﾟﾝﾌﾟ	1	SEE FIG.16
41	AG-34462-30030		FUEL FILTER	ﾌｭｰｴﾙﾌｨﾙﾀ	1	SEE FIG.17
42	AG-32C61-06000		NOZZLE	ﾉｽﾞﾙ	1	SEE FIG.15

FIG. 15 NOZZLE & HOLDER
ﾉｽﾞﾙ&ﾎﾙﾀﾞ

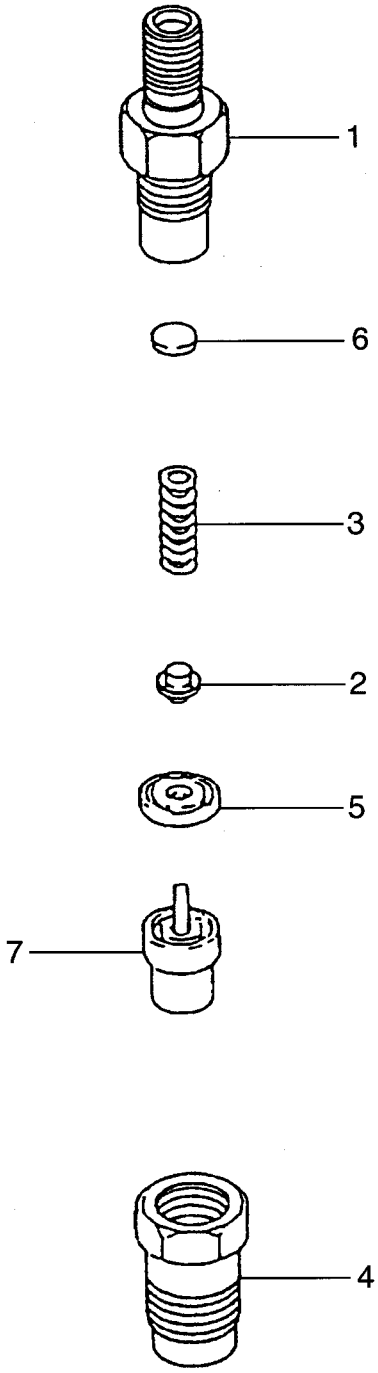

A: S6S-31TFL B: S6S-31TFLW

Item No. 見出番号	Part No. 部品番号	Mark 記号	Description 部品名称		Req'd 個数	Remarks : serial No. 備考：実施号車
A1	AG-32C61-06000		NOZZLE ASSY	ﾉｽﾞﾙｱｯｾﾝ	6	INC.1-7
A2	AG-32C61-06010		HOLDER ASSY	ﾎﾙﾀﾞｱｯｾﾝ	6	INC.1-6
1	AG-09311-05480		BODY	ﾎﾞﾃﾞｰ	6	
2	AG-09312-10380		PIN,PRESSURE	ﾋﾟﾝ	6	
3	AG-09312-70360		SPRING	ｽﾌﾟﾘﾝｸﾞ	6	
4	AG-09316-41351		NUT	ﾅｯﾄ	6	
5	AG-09317-40070		PIECE,DISTANCE	ﾋﾟｰｽ	6	
6	AG-09317-51670		WASHER	ﾜｯｼｬ	AR	t=0.900mm
-	AG-09317-51680		WASHER	ﾜｯｼｬ	AR	t=0.925mm
-	AG-09317-51690		WASHER	ﾜｯｼｬ	AR	t=0.950mm
-	AG-09317-51700		WASHER	ﾜｯｼｬ	AR	t=0.975mm
-	AG-09317-51710		WASHER	ﾜｯｼｬ	AR	t=1.000mm
-	AG-09317-51720		WASHER	ﾜｯｼｬ	AR	t=1.025mm
-	AG-09317-51730		WASHER	ﾜｯｼｬ	AR	t=1.050mm
-	AG-09317-51740		WASHER	ﾜｯｼｬ	AR	t=1.075mm
-	AG-09317-51750		WASHER	ﾜｯｼｬ	AR	t=1.100mm
-	AG-09317-51760		WASHER	ﾜｯｼｬ	AR	t=1.125mm
-	AG-09317-51770		WASHER	ﾜｯｼｬ	AR	t=1.150mm
-	AG-09317-51780		WASHER	ﾜｯｼｬ	AR	t=1.175mm
-	AG-09317-51790		WASHER	ﾜｯｼｬ	AR	t=1.200mm
-	AG-09317-51800		WASHER	ﾜｯｼｬ	AR	t=1.225mm
-	AG-09317-51810		WASHER	ﾜｯｼｬ	AR	t=1.250mm
-	AG-09317-51820		WASHER	ﾜｯｼｬ	AR	t=1.275mm
-	AG-09317-51830		WASHER	ﾜｯｼｬ	AR	t=1.300mm
-	AG-09317-51840		WASHER	ﾜｯｼｬ	AR	t=1.325mm
-	AG-09317-51850		WASHER	ﾜｯｼｬ	AR	t=1.350mm
-	AG-09317-51860		WASHER	ﾜｯｼｬ	AR	t=1.375mm
-	AG-09317-51870		WASHER	ﾜｯｼｬ	AR	t=1.400mm
-	AG-09317-51880		WASHER	ﾜｯｼｬ	AR	t=1.425mm
-	AG-09317-51890		WASHER	ﾜｯｼｬ	AR	t=1.450mm
-	AG-09317-51900		WASHER	ﾜｯｼｬ	AR	t=1.475mm
-	AG-09317-51910		WASHER	ﾜｯｼｬ	AR	t=1.500mm
-	AG-09317-51920		WASHER	ﾜｯｼｬ	AR	t=1.525mm
-	AG-09317-51930		WASHER	ﾜｯｼｬ	AR	t=1.550mm
-	AG-09317-51940		WASHER	ﾜｯｼｬ	AR	t=1.575mm
-	AG-09317-51950		WASHER	ﾜｯｼｬ	AR	t=1.600mm
-	AG-09317-51960		WASHER	ﾜｯｼｬ	AR	t=1.625mm
-	AG-09317-51970		WASHER	ﾜｯｼｬ	AR	t=1.650mm
-	AG-09317-51980		WASHER	ﾜｯｼｬ	AR	t=1.675mm
-	AG-09317-51990		WASHER	ﾜｯｼｬ	AR	t=1.700mm
-	AG-09317-52000		WASHER	ﾜｯｼｬ	AR	t=1.725mm
-	AG-09317-52010		WASHER	ﾜｯｼｬ	AR	t=1.750mm
-	AG-09317-52020		WASHER	ﾜｯｼｬ	AR	t=1.775mm
-	AG-09317-52030		WASHER	ﾜｯｼｬ	AR	t=1.800mm
-	AG-09317-52040		WASHER	ﾜｯｼｬ	AR	t=1.825mm
-	AG-09317-52050		WASHER	ﾜｯｼｬ	AR	t=1.850mm
-	AG-09317-52060		WASHER	ﾜｯｼｬ	AR	t=1.875mm
-	AG-09317-52070		WASHER	ﾜｯｼｬ	AR	t=1.900mm
-	AG-09317-52080		WASHER	ﾜｯｼｬ	AR	t=1.925mm
-	AG-09317-52090		WASHER	ﾜｯｼｬ	AR	t=1.950mm

FIG. 15 NOZZLE & HOLDER
ﾉｽﾞﾙ&ﾎﾙﾀﾞ

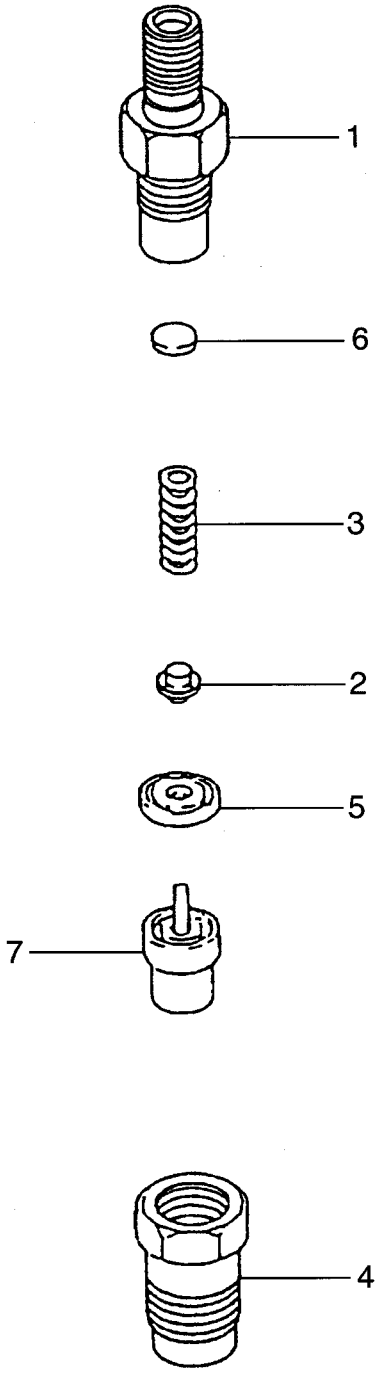

FIG. 15

A: S6S-31TFL B: S6S-31TFLW

Item No. 見出番号	Part No. 部品番号	Mark 記号	Description 部品名称	Req'd 個数	Remarks : serial No. 備考：実施号車
7	AG-34661-02000		TIP ﾁｯﾌﾟ	6	

FIG. 16 INJECTION PUMP
インジェクションポンプ

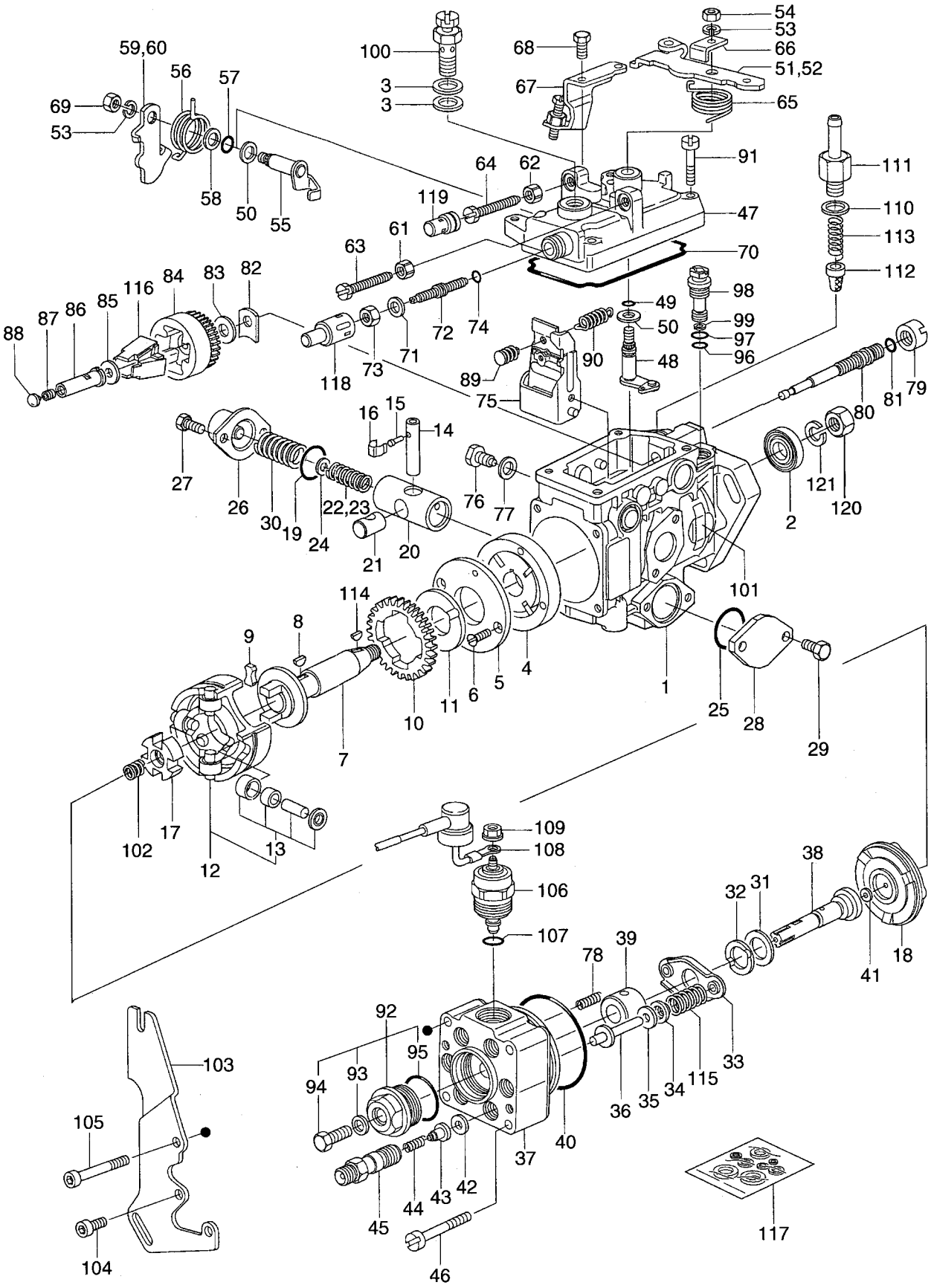

A: S6S-31TFL B: S6S-31TFLW

Item No. 見出番号	Part No. 部品番号	Mark 記号	Description 部品名称		Req'd 個数	Remarks : serial No. 備考：実施号車
A1	AG-32B65-00510		INJECTION PUMP ASSY	ｲﾝｼﾞｪｸｼｮﾝﾎﾟﾝﾌﾟｱｯｾﾝ	1	INC.1-121
K	AG-14669-90020		VALVE KIT	ﾊﾞﾙﾌﾞｷｯﾄ	1	INC.106-109
1	AG-14602-01820		HOUSING,PUMP	ﾊｳｼﾞﾝｸﾞ	1	INC.2
2	AG-14660-10900		SEAL,OIL	ｼｰﾙ	1	
3	AG-13951-20500		GASKET	ｶﾞｽｹｯﾄ	2	
4	AG-14610-00420		PUMP,FEED	ﾎﾟﾝﾌﾟ	1	
5	AG-14610-30100		COVER	ｶﾊﾞｰ	1	
6	AG-13910-40000		SCREW	ｽｸﾘｭ	2	
A2	AG-14620-00020		DRIVE SHAFT ASSY	ﾄﾞﾗｲﾌﾞｼｬﾌﾄｱｯｾﾝ	1	INC.7-10
7	AG-14620-00000		SHAFT,DRIVE	ｼｬﾌﾄ	1	
8	AG-14620-10000		KEY,WOODRUFF	ｷｰ	1	
9	AG-14620-20100		DAMPER	ﾀﾞﾝﾊﾟ	2	
10	AG-14620-30000		GEAR	ｷﾞﾔｰ	1	
11	AG-14620-40000		WASHER	ﾜｯｼｬ	1	
12	AG-14621-02720		ROLLER	ﾛｰﾗ	1	INC.13
13	AG-14621-05720		ROLLER KIT	ﾛｰﾗｷｯﾄ	1	
14	AG-14630-30000		PIN	ﾋﾟﾝ	1	
15	AG-14630-40000		PIN	ﾋﾟﾝ	1	
16	AG-14630-50000		CLIP	ｸﾘｯﾌﾟ	1	
17	AG-14620-50000		DISC	ﾃﾞｨｽｸ	1	
18	AG-14622-10120		CAM,DISC	ｶﾑ	1	
19	AG-14660-00800		O RING	Oﾘﾝｸﾞ	1	
20	AG-14631-18720		PISTON	ﾋﾟｽﾄﾝ	1	
21	AG-14630-10000		SLIDER	ｽﾗｲﾀﾞ	1	
22	AG-14631-26300		SPRING,TIMER	ｽﾌﾟﾘﾝｸﾞ	1	
23	AG-14631-26200		SPRING,TIMER	ｽﾌﾟﾘﾝｸﾞ	1	
24	AG-14669-04300		SHIM	ｼﾑ	AR	t=0.75mm
-	AG-14669-04200		SHIM	ｼﾑ	AR	t=0.5mm
-	AG-14669-04100		SHIM	ｼﾑ	AR	t=2.0mm
-	AG-14669-03500		SHIM	ｼﾑ	AR	t=1.0mm
-	AG-14669-03400		SHIM	ｼﾑ	AR	t=0.25mm
-	AG-14669-03300		SHIM	ｼﾑ	AR	t=0.2mm
-	AG-14669-03200		SHIM	ｼﾑ	AR	t=0.1mm
25	AG-14660-00800		O RING	Oﾘﾝｸﾞ	1	
26	AG-14631-04020		COVER	ｶﾊﾞｰ	1	
27	AG-14662-05000		BOLT	ﾎﾞﾙﾄ	2	
28	AG-14631-00100		COVER	ｶﾊﾞｰ	1	
29	AG-14662-05000		BOLT	ﾎﾞﾙﾄ	2	
30	AG-14631-21900		SPRING,TIMER	ｽﾌﾟﾘﾝｸﾞ	1	
31	AG-14623-00000		SHIM	ｼﾑ	1	
32	AG-14623-00100		WASHER	ﾜｯｼｬ	1	
33	AG-14623-10001		SEAT,SPRING	ｼｰﾄ	1	
34	AG-14623-30000		SEAT,SPRING	ｼｰﾄ	2	
35	AG-14660-30600		SHIM	ｼﾑ	AR	t=2.0mm
-	AG-14660-30500		SHIM	ｼﾑ	AR	t=1.8mm
-	AG-14669-06700		SHIM	ｼﾑ	AR	t=3.0mm
-	AG-14669-06600		SHIM	ｼﾑ	AR	t=2.9mm
-	AG-14669-06500		SHIM	ｼﾑ	AR	t=2.8mm
-	AG-14669-06400		SHIM	ｼﾑ	AR	t=2.7mm

FIG. 16 INJECTION PUMP
インジェクションポンプ

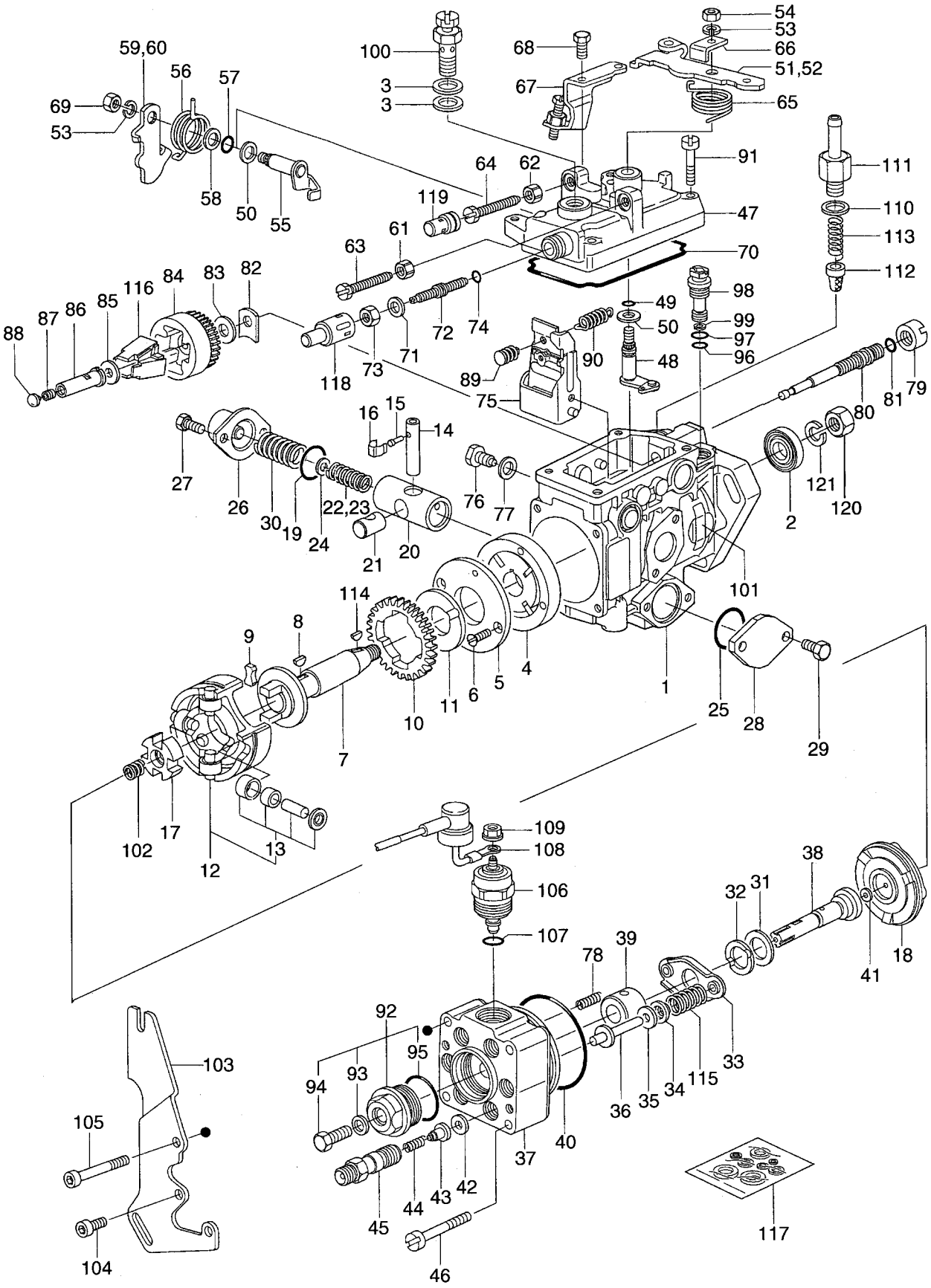

A: S6S-31TFL B: S6S-31TFLW

Item No. 見出番号	Part No. 部品番号	Mark 記号	Description 部品名称		Req'd 個数	Remarks : serial No. 備考：実施号車
35	AG-14669-06300		SHIM	ｼﾑ	AR	t=2.6mm
-	AG-14669-06200		SHIM	ｼﾑ	AR	t=2.5mm
-	AG-14669-06100		SHIM	ｼﾑ	AR	t=2.4mm
-	AG-14669-06000		SHIM	ｼﾑ	AR	t=2.3mm
-	AG-14669-05900		SHIM	ｼﾑ	AR	t=2.2mm
-	AG-14669-05800		SHIM	ｼﾑ	AR	t=2.1mm
-	AG-14669-01900		SHIM	ｼﾑ	AR	t=1.7mm
-	AG-14669-01800		SHIM	ｼﾑ	AR	t=1.6mm
-	AG-14669-01700		SHIM	ｼﾑ	AR	t=1.4mm
-	AG-14669-01600		SHIM	ｼﾑ	AR	t=1.3mm
-	AG-14669-01500		SHIM	ｼﾑ	AR	t=1.1mm
-	AG-14660-30400		SHIM	ｼﾑ	AR	t=1.5mm
-	AG-14660-30300		SHIM	ｼﾑ	AR	t=1.2mm
-	AG-14660-30200		SHIM	ｼﾑ	AR	t=1.0mm
-	AG-14660-30100		SHIM	ｼﾑ	AR	t=0.8mm
-	AG-14660-30000		SHIM	ｼﾑ	AR	t=0.5mm
-	AG-14669-01400		SHIM	ｼﾑ	AR	t=0.9mm
-	AG-14669-07800		SHIM	ｼﾑ	AR	t=0.2mm
-	AG-14669-07500		SHIM	ｼﾑ	AR	t=1.9mm
-	AG-14669-07400		SHIM	ｼﾑ	AR	t=0.7mm
-	AG-14669-07300		SHIM	ｼﾑ	AR	t=0.6mm
-	AG-14669-07200		SHIM	ｼﾑ	AR	t=0.4mm
-	AG-14669-07100		SHIM	ｼﾑ	AR	t=3.4mm
-	AG-14669-07000		SHIM	ｼﾑ	AR	t=3.3mm
-	AG-14669-06900		SHIM	ｼﾑ	AR	t=3.2mm
-	AG-14669-06800		SHIM	ｼﾑ	AR	t=3.1mm
36	AG-14623-40600		PIN,GUIDE	ﾋﾟﾝ	2	
37	AG-14640-54420		HEAD,DISTRIBUTOR	ﾍｯﾄﾞ	1	INC.38,39
38	NO PART NO.		SHAFT	ｼｬﾌﾄ	1	
39	NO PART NO.		PISTON	ﾋﾟｽﾄﾝ	1	
40	AG-14660-00000		O RING	Oﾘﾝｸﾞ	1	
41	AG-14642-02700		SHIM	ｼﾑ	AR	t=2.44mm
-	AG-14642-02600		SHIM	ｼﾑ	AR	t=2.42mm
-	AG-14642-02500		SHIM	ｼﾑ	AR	t=2.40mm
-	AG-14642-02400		SHIM	ｼﾑ	AR	t=2.38mm
-	AG-14642-00000		SHIM	ｼﾑ	AR	t=1.90mm
-	AG-14642-00100		SHIM	ｼﾑ	AR	t=1.92mm
-	AG-14642-00200		SHIM	ｼﾑ	AR	t=1.94mm
-	AG-14642-00300		SHIM	ｼﾑ	AR	t=1.96mm
-	AG-14642-00400		SHIM	ｼﾑ	AR	t=1.98mm
-	AG-14642-00500		SHIM	ｼﾑ	AR	t=2.00mm
-	AG-14642-00600		SHIM	ｼﾑ	AR	t=2.02mm
-	AG-14642-02200		SHIM	ｼﾑ	AR	t=2.34mm
-	AG-14642-02100		SHIM	ｼﾑ	AR	t=2.32mm
-	AG-14642-02300		SHIM	ｼﾑ	AR	t=2.36mm
-	AG-14642-02000		SHIM	ｼﾑ	AR	t=2.30mm
-	AG-14642-01900		SHIM	ｼﾑ	AR	t=2.28mm
-	AG-14642-01800		SHIM	ｼﾑ	AR	t=2.26mm
-	AG-14642-01700		SHIM	ｼﾑ	AR	t=2.24mm
-	AG-14642-01600		SHIM	ｼﾑ	AR	t=2.22mm

FIG. 16 INJECTION PUMP
インジェクションポンプ

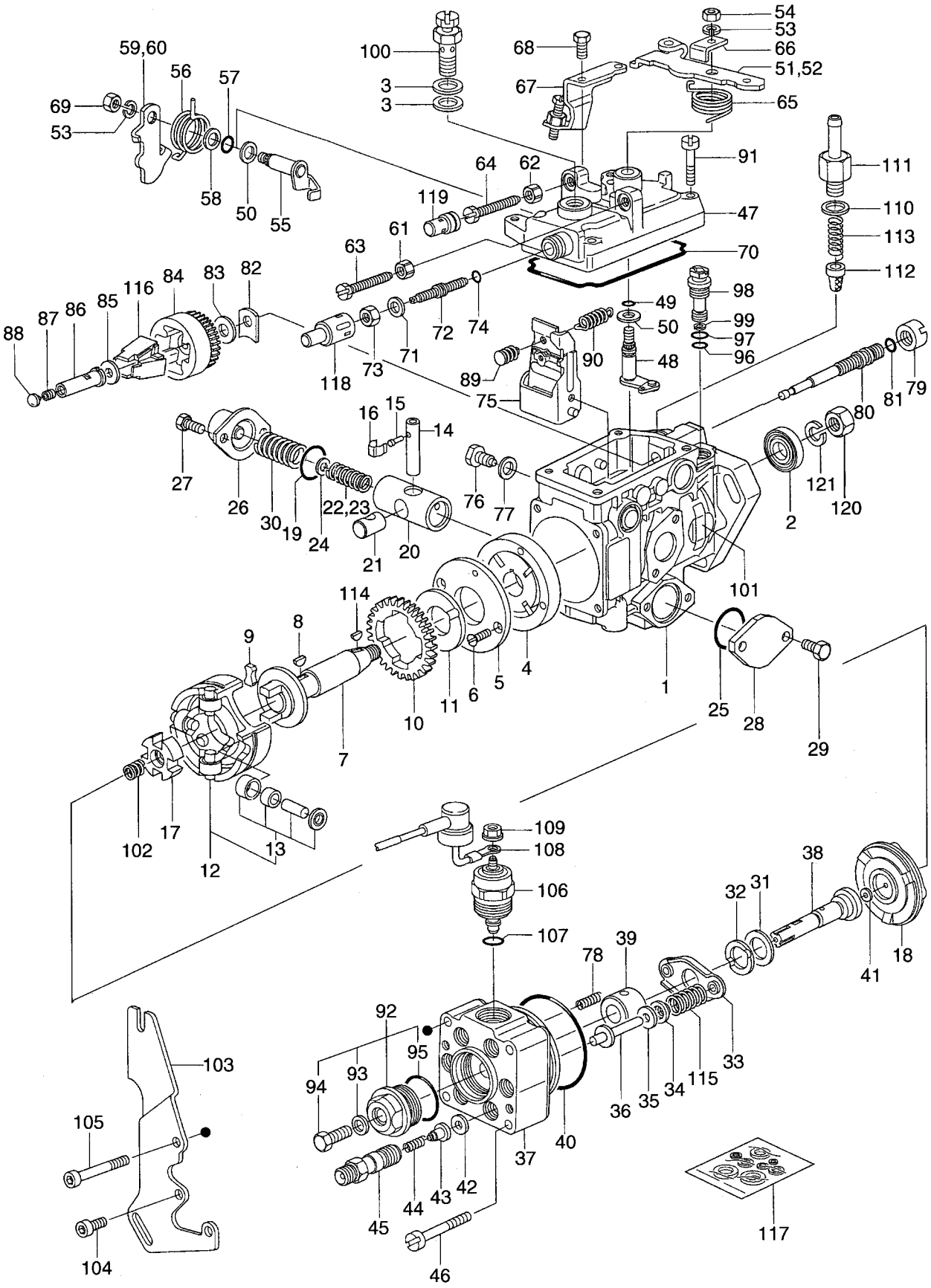

A: S6S-31TFL B: S6S-31TFLW

Item No. 見出番号	Part No. 部品番号	Mark 記号	Description 部品名称		Req'd 個数	Remarks : serial No. 備考：実施号車
41	AG-14642-01500		SHIM	ｼﾑ	AR	t=2.20mm
-	AG-14642-01400		SHIM	ｼﾑ	AR	t=2.18mm
-	AG-14642-01300		SHIM	ｼﾑ	AR	t=2.16mm
-	AG-14642-01200		SHIM	ｼﾑ	AR	t=2.14mm
-	AG-14642-01100		SHIM	ｼﾑ	AR	t=2.12mm
-	AG-14642-02800		SHIM	ｼﾑ	AR	t=2.46mm
-	AG-14642-02900		SHIM	ｼﾑ	AR	t=2.48mm
-	AG-14642-05800		SHIM	ｼﾑ	AR	t=1.88mm
-	AG-14642-05700		SHIM	ｼﾑ	AR	t=1.86mm
-	AG-14642-05600		SHIM	ｼﾑ	AR	t=1.84mm
-	AG-14642-05500		SHIM	ｼﾑ	AR	t=1.82mm
-	AG-14642-05400		SHIM	ｼﾑ	AR	t=1.80mm
-	AG-14642-05300		SHIM	ｼﾑ	AR	t=1.78mm
-	AG-14642-05200		SHIM	ｼﾑ	AR	t=1.76mm
-	AG-14642-05100		SHIM	ｼﾑ	AR	t=1.74mm
-	AG-14642-05000		SHIM	ｼﾑ	AR	t=2.90mm
-	AG-14642-04900		SHIM	ｼﾑ	AR	t=2.88mm
-	AG-14642-04800		SHIM	ｼﾑ	AR	t=2.86mm
-	AG-14642-04700		SHIM	ｼﾑ	AR	t=2.84mm
-	AG-14642-04600		SHIM	ｼﾑ	AR	t=2.82mm
-	AG-14642-04500		SHIM	ｼﾑ	AR	t=2.80mm
-	AG-14642-04400		SHIM	ｼﾑ	AR	t=2.78mm
-	AG-14642-04300		SHIM	ｼﾑ	AR	t=2.76mm
-	AG-14642-04200		SHIM	ｼﾑ	AR	t=2.74mm
-	AG-14642-04100		SHIM	ｼﾑ	AR	t=2.72mm
-	AG-14642-04000		SHIM	ｼﾑ	AR	t=2.70mm
-	AG-14642-03900		SHIM	ｼﾑ	AR	t=2.68mm
-	AG-14642-03800		SHIM	ｼﾑ	AR	t=2.66mm
-	AG-14642-03700		SHIM	ｼﾑ	AR	t=2.64mm
-	AG-14642-03600		SHIM	ｼﾑ	AR	t=2.62mm
-	AG-14642-03500		SHIM	ｼﾑ	AR	t=2.60mm
-	AG-14642-03400		SHIM	ｼﾑ	AR	t=2.58mm
-	AG-14642-03300		SHIM	ｼﾑ	AR	t=2.56mm
-	AG-14642-03200		SHIM	ｼﾑ	AR	t=2.54mm
-	AG-14642-03100		SHIM	ｼﾑ	AR	t=2.52mm
-	AG-14642-03000		SHIM	ｼﾑ	AR	t=2.50mm
-	AG-14642-00700		SHIM	ｼﾑ	AR	t=2.04mm
-	AG-14642-00800		SHIM	ｼﾑ	AR	t=2.06mm
-	AG-14642-00900		SHIM	ｼﾑ	AR	t=2.08mm
-	AG-14642-01000		SHIM	ｼﾑ	AR	t=2.10mm
42	AG-14643-30100		GASKET	ｶﾞｽｹｯﾄ	6	
43	AG-14643-03320		VALVE,DELIVERY	ﾊﾞﾙﾌﾞ	6	
44	AG-14643-20000		SPRING	ｽﾌﾟﾘﾝｸﾞ	6	
45	AG-14644-00220		HOLDER	ﾎﾙﾀﾞ	6	
46	AG-13910-60100		SCREW	ｽｸﾘｭ	3	
A3	AG-14682-20720		COVER ASSY	ｶﾊﾞｰｱｯｾﾝ	1	INC.47-74
47	AG-14650-81022		COVER,GOVERNOR	ｶﾊﾞｰ	1	
48	AG-14651-50320		SHAFT,CONTROL	ｼｬﾌﾄ	1	
49	AG-14660-00100		O RING	Oﾘﾝｸﾞ	1	
50	AG-13931-00200		WASHER	ﾜｯｼｬ	2	

FIG. 16 INJECTION PUMP
インジェクションポンプ

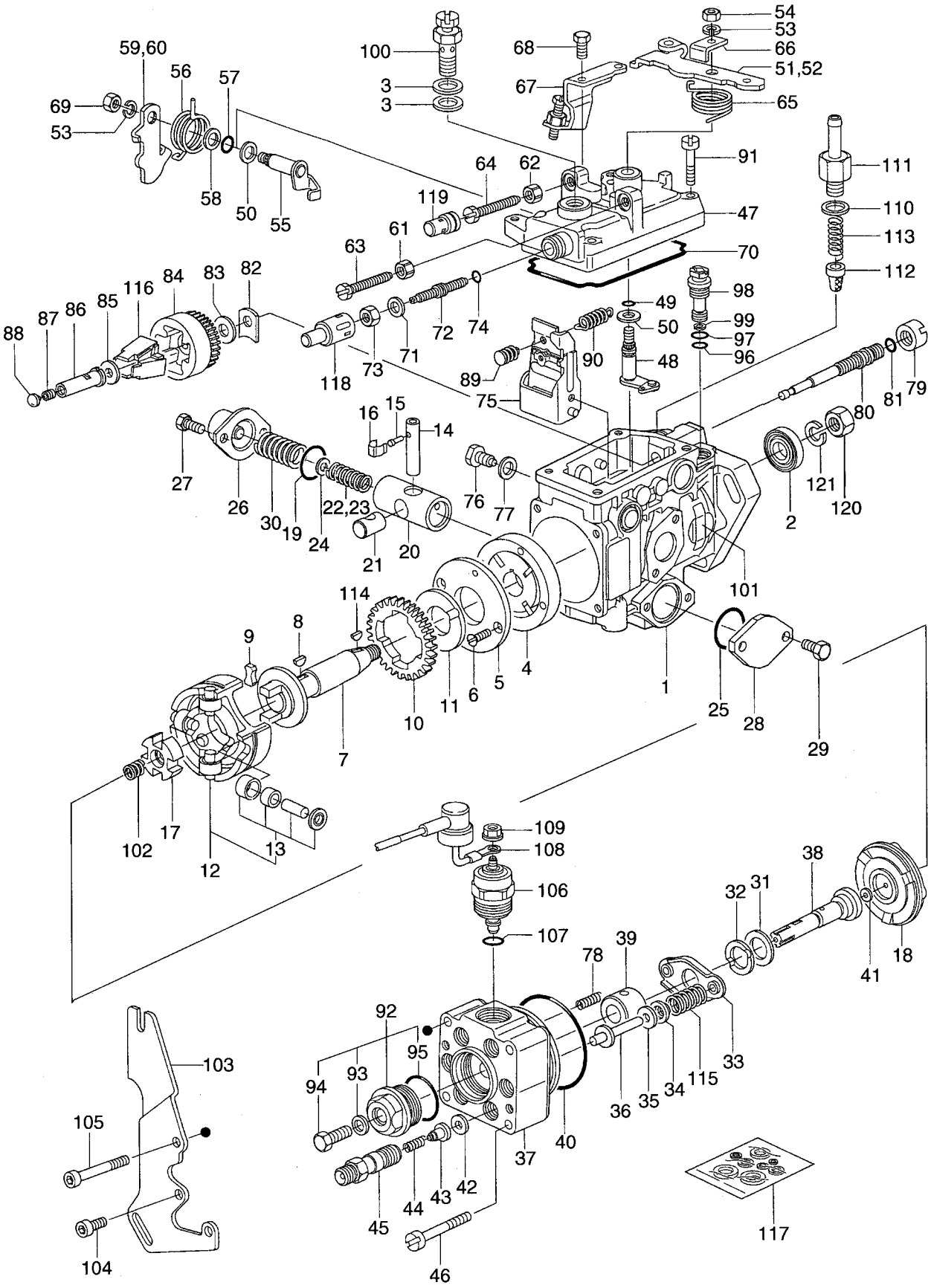

A: S6S-31TFL B: S6S-31TFLW

Item No. 見出番号	Part No. 部品番号	Mark 記号	Description 部品名称		Req'd 個数	Remarks : serial No. 備考：実施号車
51	AG-14683-25500		LEVER	ﾚﾊﾞｰ	1	
52	AG-14683-25600		LEVER	ﾚﾊﾞｰ	1	
53	AG-01411-06440		WASHER	ﾜｯｼｬ	2	
54	AG-01302-06040		NUT	ﾅｯﾄ	1	
55	AG-14651-51820		SHAFT,LEVER	ｼｬﾌﾄ	1	
56	AG-14658-74500		SPRING	ｽﾌﾟﾘﾝｸﾞ	1	
57	AG-14660-00200		O RING	Oﾘﾝｸﾞ	1	
58	AG-14660-20100		WASHER	ﾜｯｼｬ	1	
59	AG-14654-01300		LEVER	ﾚﾊﾞｰ	1	
60	AG-14654-01400		LEVER	ﾚﾊﾞｰ	1	
61	AG-14662-11700		NUT	ﾅｯﾄ	1	
62	AG-14662-11700		NUT	ﾅｯﾄ	1	
63	AG-14652-62800		BOLT	ﾎﾞﾙﾄ	1	
64	AG-14652-63400		BOLT	ﾎﾞﾙﾄ	1	
65	AG-14658-70400		SPRING	ｽﾌﾟﾘﾝｸﾞ	1	
66	AG-14654-10000		ANGLE	ｱﾝｸﾞﾙ	1	
67	AG-14692-52520		BRACKET	ﾌﾞﾗｹｯﾄ	1	
68	AG-13900-64500		BOLT	ﾎﾞﾙﾄ	2	
69	AG-01302-06040		NUT	ﾅｯﾄ	1	
70	AG-14660-04400		RING,SEAL	ﾘﾝｸﾞ	1	
71	AG-13930-80300		WASHER	ﾜｯｼｬ	1	
72	AG-14654-53400		SCREW,LOAD	ｽｸﾘｭ	1	L=53.0mm
-	AG-14654-53500		SCREW,LOAD	ｽｸﾘｭ	1	L=55.0mm
-	AG-14654-53600		SCREW,LOAD	ｽｸﾘｭ	1	L=57.0mm
73	AG-13920-80900		NUT	ﾅｯﾄ	1	
74	AG-14660-01200		O RING	Oﾘﾝｸﾞ	1	
75	AG-14687-18020		LEVER,GOVERNOR	ﾚﾊﾞｰ	1	
76	AG-14656-80000		BOLT,PIVOT	ﾎﾞﾙﾄ	2	
77	AG-02650-81140		GASKET	ｶﾞｽｹｯﾄ	2	
78	AG-14658-80500		SPRING	ｽﾌﾟﾘﾝｸﾞ	2	
79	AG-14656-90300		NUT	ﾅｯﾄ	1	
80	AG-14657-00420		SHAFT,GOVERNOR	ｼｬﾌﾄ	1	
81	AG-14660-00400		O RING	Oﾘﾝｸﾞ	AR	
82	AG-14657-10800		SHIM	ｼﾑ	AR	t=1.75mm
-	AG-14657-10700		SHIM	ｼﾑ	AR	t=1.55mm
-	AG-14657-10600		SHIM	ｼﾑ	AR	t=1.35mm
-	AG-14657-10500		SHIM	ｼﾑ	AR	t=1.15mm
-	AG-14657-10400		SHIM	ｼﾑ	AR	t=1.85mm
-	AG-14657-10300		SHIM	ｼﾑ	AR	t=1.65mm
-	AG-14657-10200		SHIM	ｼﾑ	AR	t=1.45mm
-	AG-14657-10100		SHIM	ｼﾑ	AR	t=1.25mm
-	AG-14657-10000		SHIM	ｼﾑ	AR	t=1.05mm
83	AG-14660-20600		WASHER	ﾜｯｼｬ	1	
84	AG-14657-20020		HOLDER	ﾎﾙﾀﾞ	1	
85	AG-14660-22600		WASHER	ﾜｯｼｬ	1	
86	AG-14697-61200		SLEEVE	ｽﾘｰﾌﾞ	1	
87	AG-14657-60200		CAP	ｷｬｯﾌﾟ	1	
88	AG-14657-73000		PLUG	ﾌﾟﾗｸﾞ	1	L=4.5mm
-	AG-14657-72900		PLUG	ﾌﾟﾗｸﾞ	1	L=4.3mm
-	AG-14657-72800		PLUG	ﾌﾟﾗｸﾞ	1	L=4.1mm

FIG. 16 INJECTION PUMP
インジェクションポンプ

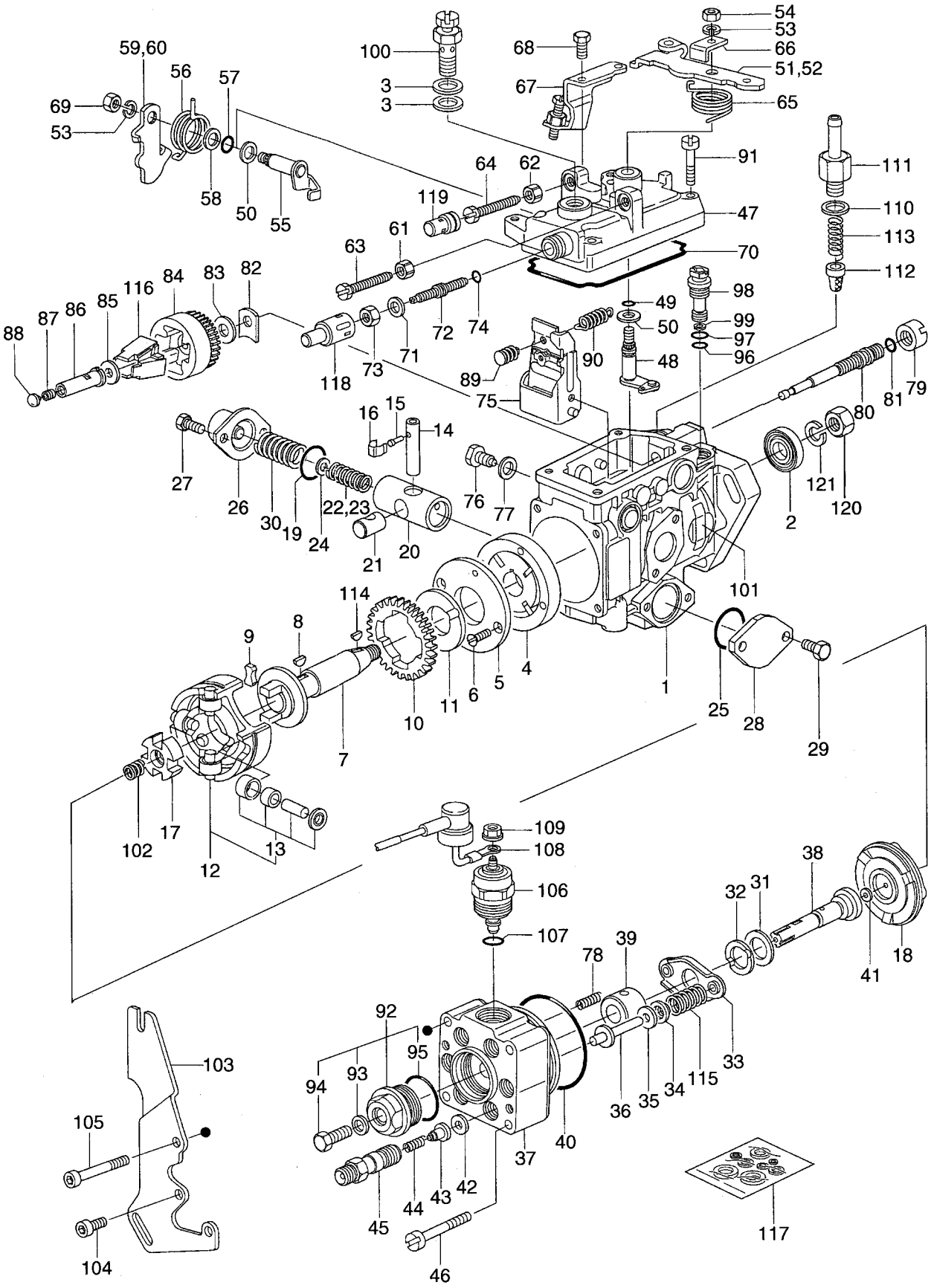

A: S6S-31TFL B: S6S-31TFLW

Item No. 見出番号	Part No. 部品番号	Mark 記号	Description 部品名称		Req'd 個数	Remarks : serial No. 備考：実施号車
88	AG-14657-72700		PLUG	ﾌﾟﾗｸﾞ	1	L=3.9mm
-	AG-14657-72600		PLUG	ﾌﾟﾗｸﾞ	1	L=3.7mm
-	AG-14657-72500		PLUG	ﾌﾟﾗｸﾞ	1	L=3.5mm
-	AG-14657-72400		PLUG	ﾌﾟﾗｸﾞ	1	L=3.3mm
-	AG-14657-72300		PLUG	ﾌﾟﾗｸﾞ	1	L=3.1mm
-	AG-14657-72200		PLUG	ﾌﾟﾗｸﾞ	1	L=2.9mm
-	AG-14687-74800		PLUG	ﾌﾟﾗｸﾞ	1	L=11.2mm
-	AG-14687-74700		PLUG	ﾌﾟﾗｸﾞ	1	L=11.1mm
-	AG-14687-70300		PLUG	ﾌﾟﾗｸﾞ	1	L=5.5mm
-	AG-14687-70200		PLUG	ﾌﾟﾗｸﾞ	1	L=5.4mm
-	AG-14687-70100		PLUG	ﾌﾟﾗｸﾞ	1	L=5.3mm
-	AG-14687-70000		PLUG	ﾌﾟﾗｸﾞ	1	L=5.2mm
-	AG-14687-75000		PLUG	ﾌﾟﾗｸﾞ	1	L=11.4mm
-	AG-14687-74900		PLUG	ﾌﾟﾗｸﾞ	1	L=11.3mm
-	AG-14657-72100		PLUG	ﾌﾟﾗｸﾞ	1	L=2.7mm
-	AG-14657-72000		PLUG	ﾌﾟﾗｸﾞ	1	L=2.5mm
-	AG-14657-71900		PLUG	ﾌﾟﾗｸﾞ	1	L=2.3mm
-	AG-14657-71800		PLUG	ﾌﾟﾗｸﾞ	1	L=2.1mm
-	AG-14657-73100		PLUG	ﾌﾟﾗｸﾞ	1	L=4.7mm
-	AG-14657-73200		PLUG	ﾌﾟﾗｸﾞ	1	L=4.9mm
-	AG-14657-73300		PLUG	ﾌﾟﾗｸﾞ	1	L=5.1mm
-	AG-14657-76700		PLUG	ﾌﾟﾗｸﾞ	1	L=2.2mm
-	AG-14657-76800		PLUG	ﾌﾟﾗｸﾞ	1	L=2.4mm
-	AG-14657-76900		PLUG	ﾌﾟﾗｸﾞ	1	L=2.6mm
-	AG-14657-77000		PLUG	ﾌﾟﾗｸﾞ	1	L=2.8mm
-	AG-14657-77100		PLUG	ﾌﾟﾗｸﾞ	1	L=3.0mm
-	AG-14657-77200		PLUG	ﾌﾟﾗｸﾞ	1	L=3.2mm
-	AG-14657-77300		PLUG	ﾌﾟﾗｸﾞ	1	L=3.4mm
-	AG-14657-77400		PLUG	ﾌﾟﾗｸﾞ	1	L=3.6mm
-	AG-14657-77500		PLUG	ﾌﾟﾗｸﾞ	1	L=3.8mm
-	AG-14657-77600		PLUG	ﾌﾟﾗｸﾞ	1	L=4.0mm
-	AG-14657-77700		PLUG	ﾌﾟﾗｸﾞ	1	L=4.2mm
-	AG-14657-77800		PLUG	ﾌﾟﾗｸﾞ	1	L=4.4mm
-	AG-14657-77900		PLUG	ﾌﾟﾗｸﾞ	1	L=4.6mm
-	AG-14657-78000		PLUG	ﾌﾟﾗｸﾞ	1	L=4.8mm
-	AG-14657-78100		PLUG	ﾌﾟﾗｸﾞ	1	L=5.0mm
89	AG-14687-93720		PIN	ﾋﾟﾝ	1	
90	AG-14658-01400		SPRING	ｽﾌﾟﾘﾝｸﾞ	1	
91	AG-13910-60200		SCREW	ｽｸﾘｭ	4	
92	AG-14642-10020		PLUG	ﾌﾟﾗｸﾞ	1	INC.93-95
93	AG-02650-81140		GASKET	ｶﾞｽｹｯﾄ	1	
94	AG-14642-20000		BOLT	ﾎﾞﾙﾄ	1	
95	AG-14660-00500		O RING	Oﾘﾝｸﾞ	1	
96	AG-14660-00600		O RING	Oﾘﾝｸﾞ	1	
97	AG-14660-00700		O RING	Oﾘﾝｸﾞ	1	
98	AG-14611-00220		VALVE,REGULATING	ﾊﾞﾙﾌﾞ	1	INC.99
99	AG-14611-40000		RING,SPRING	ﾘﾝｸﾞ	1	
100	AG-14612-00120		VALVE,OVER FLOW	ﾊﾞﾙﾌﾞ	1	
101	AG-14698-99000		PLATE,NUMBER	ﾌﾟﾚｰﾄ	1	
102	AG-14620-60100		SPRING	ｽﾌﾟﾘﾝｸﾞ	1	

FIG. 16 INJECTION PUMP
インジェクションポンプ

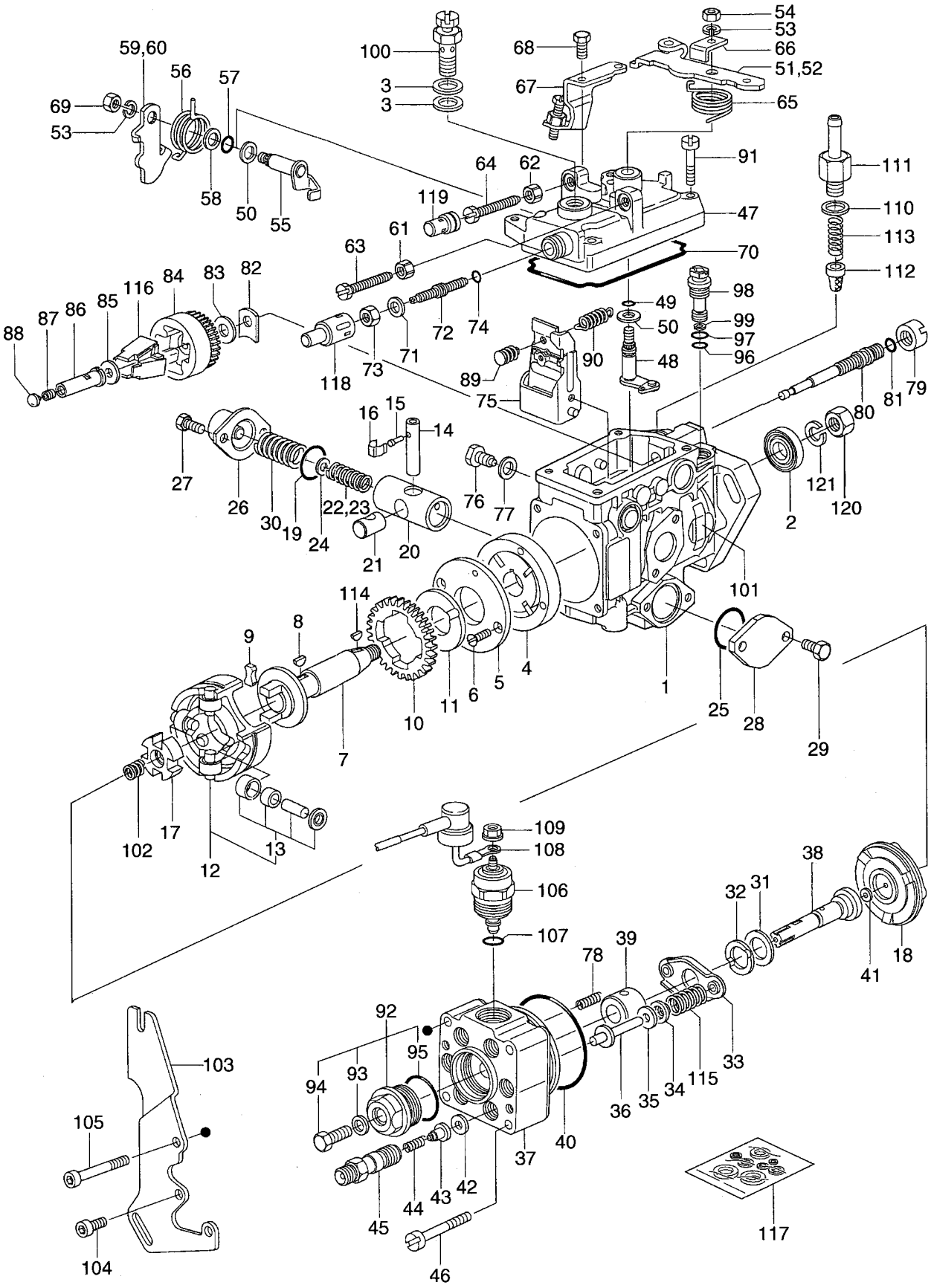

A: S6S-31TFL B: S6S-31TFLW

Item No. 見出番号	Part No. 部品番号	Mark 記号	Description 部品名称		Req'd 個数	Remarks : serial No. 備考：実施号車
103	AG-14693-63000		BRACKET	ﾌﾞﾗｹｯﾄ	1	
104	AG-01020-62240		BOLT	ﾎﾞﾙﾄ	2	
105	AG-14662-00200		BOLT	ﾎﾞﾙﾄ	1	
106	AG-14665-00820	*	VALVE,MAGNET	ﾊﾞﾙﾌﾞ	1	
107	AG-14660-01700	*	O RING	Oﾘﾝｸﾞ	1	
108	AG-14666-20120	*	WIRE	ﾜｲﾔ	1	
109	AG-14662-14901	*	NUT	ﾅｯﾄ	1	
110	AG-13951-20500		GASKET	ｶﾞｽｹｯﾄ	1	
111	AG-14666-91720		EYE	ｱｲ	1	
112	AG-14612-50101		FILTER	ﾌｨﾙﾀ	1	
113	AG-14612-50200		SPRING	ｽﾌﾟﾘﾝｸﾞ	1	
114	AG-02580-31640		KEY,WOODRUFF	ｷｰ	1	
115	AG-14623-20720		SPRING	ｽﾌﾟﾘﾝｸﾞ	1	
116	AG-14657-40120		FLYWEIGHT	ﾌﾗｲｳｴｲﾄ	1	
117	AG-14660-01120		REPAIR KIT	ﾘﾍﾟｱｷｯﾄ	1	
118	AG-14659-81000		CAP	ｷｬｯﾌﾟ	1	
119	AG-14659-80900		CAP	ｷｬｯﾌﾟ	AR	L=27mm
-	AG-14659-80800		CAP	ｷｬｯﾌﾟ	AR	L=24mm
-	AG-14659-80700		CAP	ｷｬｯﾌﾟ	AR	L=21mm
-	AG-14659-80600		CAP	ｷｬｯﾌﾟ	AR	L=18mm
120	AG-01302-12140		NUT	ﾅｯﾄ	1	
121	AG-01411-12440		WASHER	ﾜｯｼｬ	1	

FIG. 17 FUEL FILTER
フューエルフィルタ

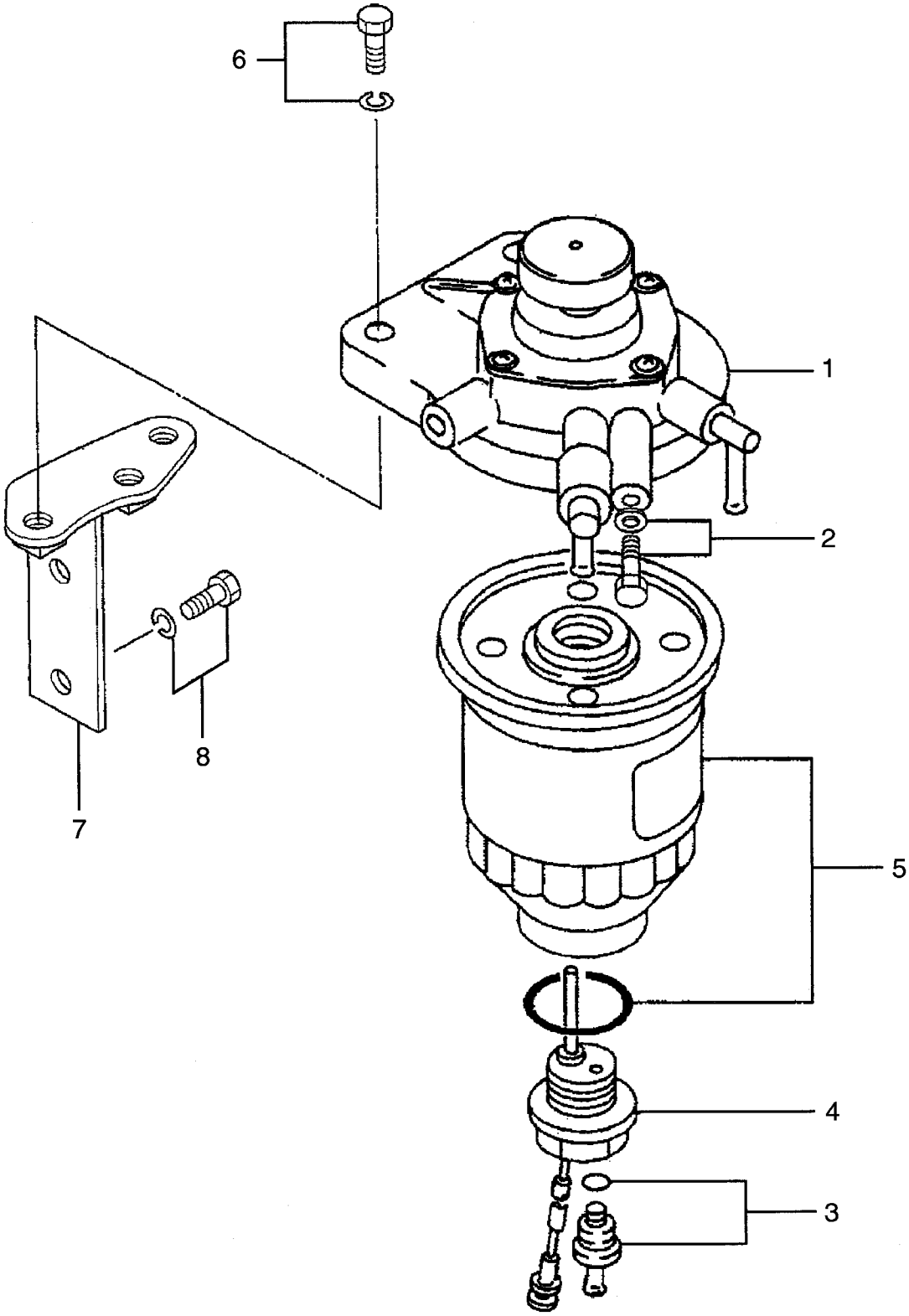

A: S6S-31TFL B: S6S-31TFLW

Item No. 見出番号	Part No. 部品番号	Mark 記号	Description 部品名称		Req'd 個数	Remarks : serial No. 備考：実施号車
A	AG-34462-30030		FUEL FILTER ASSY	ﾌｭｰｴﾙﾌｨﾙﾀｱｯｾﾝ	1	INC.1-5
1	AG-34462-01050		BODY	ﾎﾞﾃﾞｰ	1	INC.2
2	AG-34462-01060		PLUG,AIR	ﾌﾟﾗｸﾞ	1	
3	AG-34462-01070		PLUG,DRAIN	ﾌﾟﾗｸﾞ	1	
4	AG-34462-11030		SENSOR	ｾﾝｻ	1	INC.3
5	AG-34462-21040		ELEMENT	ｴﾚﾒﾝﾄ	1	
6	AG-F1805-08030		BOLT&WASHER	ﾎﾞﾙﾄ&ﾜｯｼｬ	2	
7	AG-32A62-10400		BRACKET	ﾌﾞﾗｹｯﾄ	1	
8	AG-F1805-08016		BOLT&WASHER	ﾎﾞﾙﾄ&ﾜｯｼｬ	2	

FIG. 18 ELECTRICAL PARTS
エレクトリカルパーツ

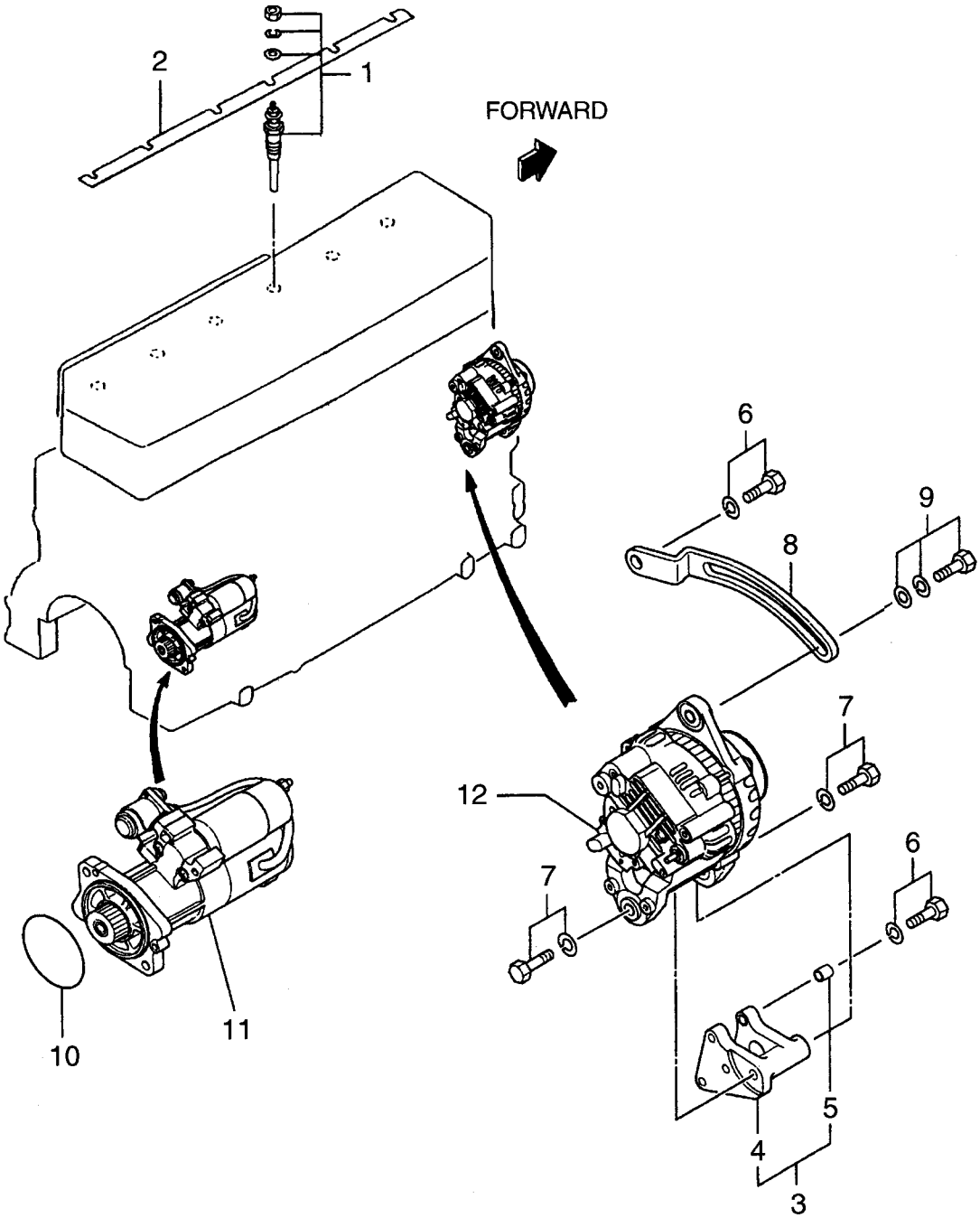

A: S6S-31TFL B: S6S-31TFLW

Item No. 見出番号	Part No. 部品番号	Mark 記号	Description 部品名称		Req'd 個数	Remarks : serial No. 備考：実施号車
1	AG-34466-31302		PLUG,GLOW	ﾌﾟﾗｸﾞ	6	
2	AG-32B66-01200		PLATE,CONNECTION	ﾌﾟﾚｰﾄ	1	
3	AG-32B68-02890		BRACKET	ﾌﾞﾗｹｯﾄ	1	INC.4,5
4	NO PART NO.	#	BRACKET	ﾌﾞﾗｹｯﾄ	1	
5	NO PART NO.	#	BUSHING	ﾌﾞｯｼﾝｸﾞ	2	
6	AG-F1805-08020		BOLT&WASHER	ﾎﾞﾙﾄ&ﾜｯｼｬ	2	
7	AG-F1805-12030		BOLT&WASHER	ﾎﾞﾙﾄ&ﾜｯｼｬ	2	
8	AG-32B68-11200		PLATE,ADJUSTING	ﾌﾟﾚｰﾄ	1	
9	AG-F1825-12025		BOLT&WASHER	ﾎﾞﾙﾄ&ﾜｯｼｬ	1	
10	AG-06016-13080		O RING	Oﾘﾝｸﾞ	1	B
11	AG-32B66-00202		STARTER	ｽﾀｰﾀ	1	A SEE FIG.19
-	AG-32B66-00400		STARTER	ｽﾀｰﾀ	1	B SEE FIG.19
12	AG-32A68-06800		ALTERNATOR	ｵﾙﾀﾈｰﾀ	1	SEE FIG.20

FIG. 19 STARTER
スタータ

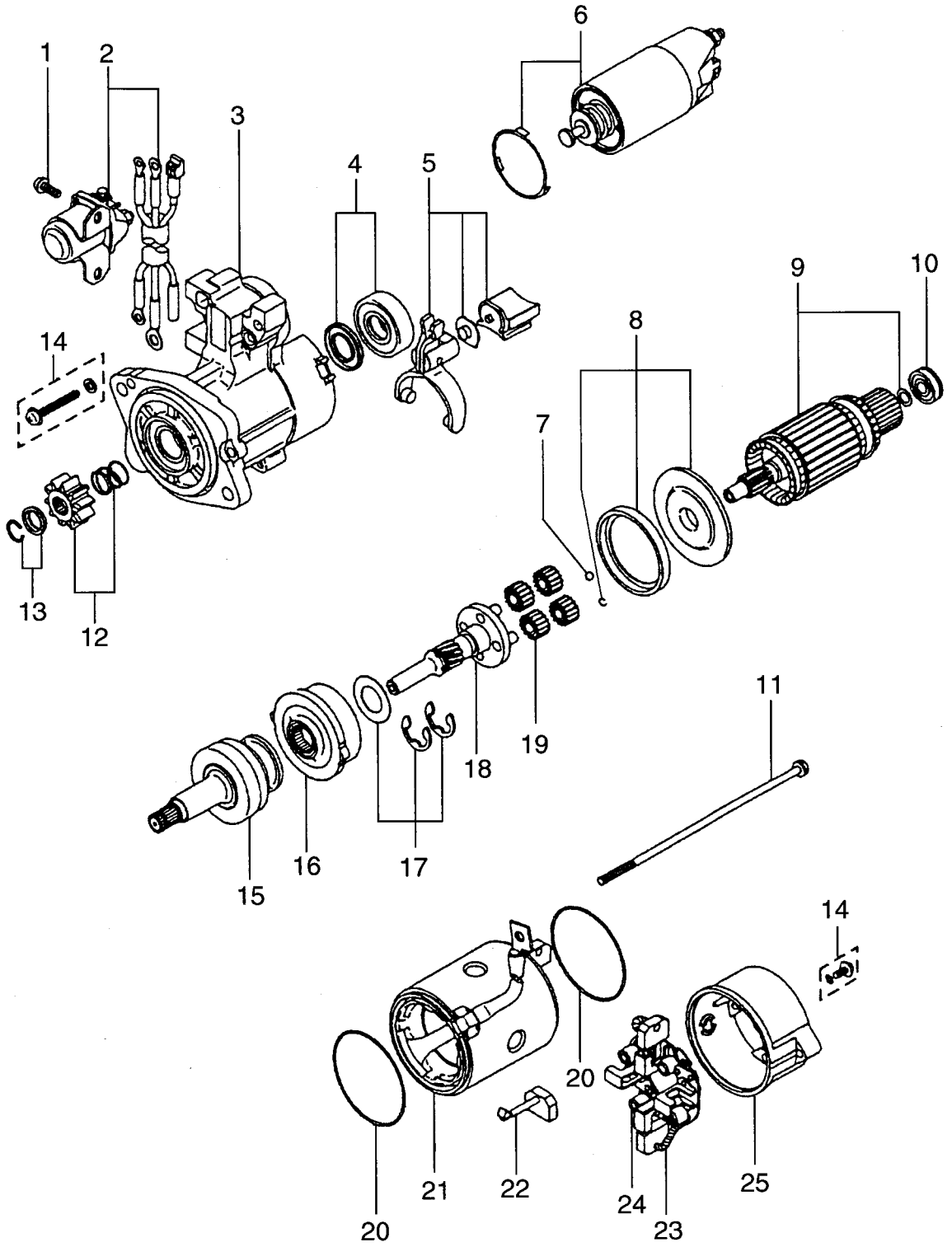

A: S6S-31TFL B: S6S-31TFLW

Item No. 見出番号	Part No. 部品番号	Mark 記号	Description 部品名称		Req'd 個数	Remarks : serial No. 備考：実施号車
A1	AG-32B66-00202		STARTER ASSY	ｽﾀｰﾀｱｯｾﾝ	1	A INC.1-25
-	AG-32B66-00400		STARTER ASSY	ｽﾀｰﾀｱｯｾﾝ	1	B INC.1-25
1	AG-M414X-07871		SCREW	ｽｸﾘｭ	1	
2	AG-U001X-35094		SWITCH	ｽｲｯﾁ	1	
3	AG-M641X-A7975		BRACKET,FRONT	ﾌﾞﾗｹｯﾄ	1	A INC.4
-	AG-M641X-E7171		BRACKET,FRONT	ﾌﾞﾗｹｯﾄ	1	B INC.4
4	AG-M690X-00671		BEARING	ﾍﾞｱﾘﾝｸﾞ	1	A
-	AG-M690X-00472		BEARING	ﾍﾞｱﾘﾝｸﾞ	1	B
5	AG-M864X-12271		LEVER	ﾚﾊﾞｰ	1	
6	AG-M371X-B3571		SWITCH	ｽｲｯﾁ	1	
7	AG-S409S-00008		BALL	ﾎﾞｰﾙ	1	
8	AG-M578X-29171		PACKING SET	ﾊﾟｯｷﾝｸﾞｾｯﾄ	1	
9	AG-M105X-43671		ARMATURE	ｱｰﾏﾁｭｱ	1	INC.10
10	AG-S930P-29970		BEARING	ﾍﾞｱﾘﾝｸﾞ	1	
11	AG-M981X-76071		BOLT	ﾎﾞﾙﾄ	1	
12	AG-M605X-99171		PINION	ﾋﾟﾆｵﾝ	1	INC.13
13	AG-M385X-03771		STOPPER	ｽﾄｯﾊﾟ	1	
14	AG-M414X-07472		SCREW	ｽｸﾘｭ	1	
A2	AG-M357X-91874		CLUTCH SHAFT ASSY	ｸﾗｯﾁｼｬﾌﾄｱｯｾﾝ	1	INC.15-19
15	AG-M191X-67685		CLUTCH	ｸﾗｯﾁ	1	
16	AG-M135X-01581		GEAR,INTERNAL	ｷﾞﾔｰ	1	
17	AG-M982X-38871		WASHER	ﾜｯｼｬ	1	
18	AG-M357X-66185		SHAFT,GEAR	ｼｬﾌﾄ	1	
19	AG-M230X-00671		GEAR	ｷﾞﾔｰ	4	
20	AG-M578D-20901		PACKING	ﾊﾟｯｷﾝｸﾞ	2	
21	AG-M800X-70471		YOKE	ﾖｰｸ	1	INC.22
22	AG-M648X-40871		BRUSH	ﾌﾞﾗｼ	2	
23	AG-M649X-21771		HOLDER	ﾎﾙﾀﾞ	1	INC.24
24	AG-M391X-04271		SPRING,BRUSH	ｽﾌﾟﾘﾝｸﾞ	4	
25	AG-M642X-34071		BRACKET,REAR	ﾌﾞﾗｹｯﾄ	1	

FIG. 20 ALTERNATOR
オルタネータ

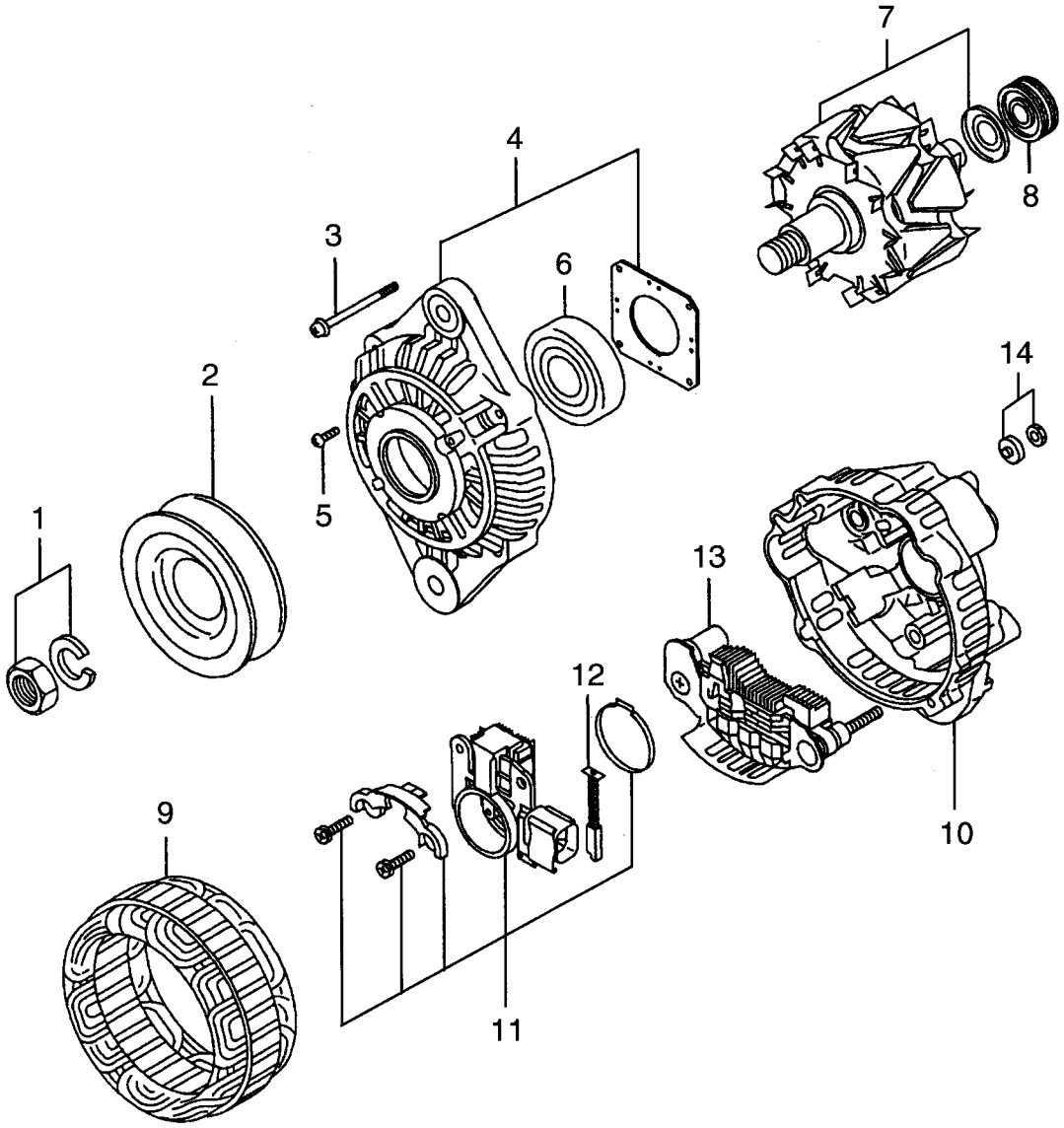

A: S6S-31TFL B: S6S-31TFLW

Item No. 見出番号	Part No. 部品番号	Mark 記号	Description 部品名称		Req'd 個数	Remarks : serial No. 備考：実施号車
A	AG-32A68-06800		ALTERNATOR ASSY	ｵﾙﾀﾈｰﾀｱｯｾﾝ	1	INC.1-14
1	AG-A529X-06571		NUT	ﾅｯﾄ	1	
2	AG-A629X-51870		PULLEY	ﾌﾟｰﾘ	1	
3	AG-A414X-19271		BOLT	ﾎﾞﾙﾄ	1	
4	AG-A640X-58670		BRACKET,FRONT	ﾌﾞﾗｹｯﾄ	1	INC.5,6
5	AG-A414X-19371		SCREW	ｽｸﾘｭ	1	
6	AG-S930P-37270		BEARING,FRONT	ﾍﾞｱﾘﾝｸﾞ	1	
7	AG-A880X-72770		ROTOR	ﾛｰﾀ	1	INC.8
8	AG-S930P-80770		BEARING,REAR	ﾍﾞｱﾘﾝｸﾞ	1	
9	AG-A383X-51570		STATOR	ｽﾃｰﾀ	1	
10	AG-A642X-33570		BRACKET,REAR	ﾌﾞﾗｹｯﾄ	1	INC.11-14
11	AG-A866X-41272		REGULATOR	ﾚｷﾞｭﾚｰﾀ	1	INC.12
12	AG-A647X-50270		BRUSH	ﾌﾞﾗｼ	2	
13	AG-A860X-73870		RECTIFIER	ﾚｸﾃｨﾌｧｲｱ	1	
14	AG-A529X-05571		NUT	ﾅｯﾄ	1	

PARTS NUMBER INDEX　部品番号索引表

部品番号 PART No.	図番号 FIG.NO.	部品番号 PART No.	図番号 FIG.NO.	部品番号 PART No.	図番号 FIG.NO.	部品番号 PART No.	図番号 FIG.NO.
AG-A383X-51570	20	AG-F2850-04008	2	AG-01020-62240	16	AG-09317-51940	15
AG-A414X-19271	20	AG-F2870-07022	5	AG-01302-06040	16	AG-09317-51950	15
AG-A414X-19371	20	AG-F2870-07022	9	AG-01302-06040	16	AG-09317-51960	15
AG-A529X-05571	20	AG-F3015-07023	6	AG-01302-12140	16	AG-09317-51970	15
AG-A529X-06571	20	AG-F3150-02000	1	AG-01411-06440	16	AG-09317-51980	15
AG-A629X-51870	20	AG-F3150-02000	12	AG-01411-12440	16	AG-09317-51990	15
AG-A640X-58670	20	AG-F3202-03000	4	AG-02580-31640	16	AG-09317-52000	15
AG-A642X-33570	20	AG-F4202-20000	1	AG-02650-81140	16	AG-09317-52010	15
AG-A647X-50270	20	AG-F4202-20000	7	AG-02650-81140	16	AG-09317-52020	15
AG-A860X-73870	20	AG-F4300-01200	14	AG-04826-21200	10	AG-09317-52030	15
AG-A866X-41272	20	AG-F5005-17001	8	AG-04826-21800	2	AG-09317-52040	15
AG-A880X-72770	20	AG-MC840219	2	AG-04826-21800	2	AG-09317-52050	15
AG-F1035-12045	5	AG-MD000269	2	AG-04826-22000	8	AG-09317-52060	15
AG-F1450-10020	11	AG-MD008784	9	AG-04826-22500	8	AG-09317-52070	15
AG-F1805-06010	6	AG-MD068353	14	AG-04826-23500	2	AG-09317-52080	15
AG-F1805-08016	6	AG-MD068355	1	AG-05379-23024	14	AG-09317-52090	15
AG-F1805-08016	7	AG-MD068355	14	AG-05507-10110	1	AG-13900-64500	16
AG-F1805-08016	8	AG-MD070717	1	AG-05507-10110	7	AG-13910-40000	16
AG-F1805-08016	9	AG-MD070717	14	AG-05605-01410	2	AG-13910-60100	16
AG-F1805-08016	12	AG-MF241264	6	AG-05633-30800	14	AG-13910-60200	16
AG-F1805-08016	12	AG-MF241266	6	AG-05633-31000	14	AG-13920-80900	16
AG-F1805-08016	14	AG-MF241266	11	AG-05640-06909	6	AG-13930-80300	16
AG-F1805-08016	17	AG-MF522010	10	AG-05910-20049	13	AG-13931-00200	16
AG-F1805-08020	8	AG-MH020804	14	AG-05946-01201	1	AG-13951-20500	16
AG-F1805-08020	11	AG-MM316248	8	AG-06016-13080	18	AG-13951-20500	16
AG-F1805-08020	12	AG-MS401429	14	AG-06016-13140	1	AG-14602-01820	16
AG-F1805-08020	14	AG-MS602007	14	AG-06016-13140	6	AG-14610-00420	16
AG-F1805-08020	18	AG-MS660174	9	AG-06016-13140	14	AG-14610-30100	16
AG-F1805-08025	10	AG-MS661140	2	AG-09311-05480	15	AG-14611-00220	16
AG-F1805-08025	13	AG-MS661142	2	AG-09312-10380	15	AG-14611-40000	16
AG-F1805-08028	14	AG-M105X-43671	19	AG-09312-70360	15	AG-14612-00120	16
AG-F1805-08030	17	AG-M135X-01581	19	AG-09316-41351	15	AG-14612-50101	16
AG-F1805-08035	13	AG-M191X-67685	19	AG-09317-40070	15	AG-14612-50200	16
AG-F1805-08040	9	AG-M230X-00671	19	AG-09317-51670	15	AG-14620-00000	16
AG-F1805-08040	11	AG-M357X-66185	19	AG-09317-51680	15	AG-14620-00020	16
AG-F1805-08040	13	AG-M357X-91874	19	AG-09317-51690	15	AG-14620-10000	16
AG-F1805-08045	13	AG-M371X-B3571	19	AG-09317-51700	15	AG-14620-20100	16
AG-F1805-08045	13	AG-M385X-03771	19	AG-09317-51710	15	AG-14620-30000	16
AG-F1805-08045	13	AG-M391X-04271	19	AG-09317-51720	15	AG-14620-40000	16
AG-F1805-08045	13	AG-M414X-07472	19	AG-09317-51730	15	AG-14620-50000	16
AG-F1805-08050	11	AG-M414X-07871	19	AG-09317-51740	15	AG-14620-60100	16
AG-F1805-08050	13	AG-M578D-20901	19	AG-09317-51750	15	AG-14621-02720	16
AG-F1805-08070	13	AG-M578X-29171	19	AG-09317-51760	15	AG-14621-05720	16
AG-F1805-10020	6	AG-M605X-99171	19	AG-09317-51770	15	AG-14622-10120	16
AG-F1805-10025	3	AG-M641X-A7975	19	AG-09317-51780	15	AG-14623-00000	16
AG-F1805-10025	14	AG-M641X-E7171	19	AG-09317-51790	15	AG-14623-00100	16
AG-F1805-10030	3	AG-M642X-34071	19	AG-09317-51800	15	AG-14623-10001	16
AG-F1805-12030	18	AG-M648X-40871	19	AG-09317-51810	15	AG-14623-20720	16
AG-F1825-06014	14	AG-M649X-21771	19	AG-09317-51820	15	AG-14623-30000	16
AG-F1825-12025	18	AG-M690X-00472	19	AG-09317-51830	15	AG-14623-40600	16
AG-F2005-10020	14	AG-M690X-00671	19	AG-09317-51840	15	AG-14630-10000	16
AG-F2300-10000	3	AG-M800X-70471	19	AG-09317-51850	15	AG-14630-30000	16
AG-F2320-10000	12	AG-M864X-12271	19	AG-09317-51860	15	AG-14630-40000	16
AG-F2325-08000	10	AG-M981X-76071	19	AG-09317-51870	15	AG-14630-50000	16
AG-F2500-10000	14	AG-M982X-38871	19	AG-09317-51880	15	AG-14631-00100	16
AG-F2515-10000	3	AG-S409S-00008	19	AG-09317-51890	15	AG-14631-04020	16
AG-F2515-10000	12	AG-S930P-29970	19	AG-09317-51900	15	AG-14631-18720	16
AG-F2846-05000	2	AG-S930P-37270	20	AG-09317-51910	15	AG-14631-21900	16
AG-F2846-10000	5	AG-S930P-80770	20	AG-09317-51920	15	AG-14631-26200	16
AG-F2846-12000	2	AG-U001X-35094	19	AG-09317-51930	15	AG-14631-26300	16

PARTS NUMBER INDEX　部品番号索引表

部品番号 PART No.	図番号 FIG.NO.	部品番号 PART No.	図番号 FIG.NO.	部品番号 PART No.	図番号 FIG.NO.	部品番号 PART No.	図番号 FIG.NO.
AG-14640-54420	16	AG-14642-10020	16	AG-14657-77900	16	AG-14669-06000	16
AG-14642-00000	16	AG-14642-20000	16	AG-14657-78000	16	AG-14669-06100	16
AG-14642-00100	16	AG-14643-03320	16	AG-14657-78100	16	AG-14669-06200	16
AG-14642-00200	16	AG-14643-20000	16	AG-14658-01400	16	AG-14669-06300	16
AG-14642-00300	16	AG-14643-30100	16	AG-14658-70400	16	AG-14669-06400	16
AG-14642-00400	16	AG-14644-00220	16	AG-14658-74500	16	AG-14669-06500	16
AG-14642-00500	16	AG-14650-81022	16	AG-14658-80500	16	AG-14669-06600	16
AG-14642-00600	16	AG-14651-50320	16	AG-14659-80600	16	AG-14669-06700	16
AG-14642-00700	16	AG-14651-51820	16	AG-14659-80700	16	AG-14669-06800	16
AG-14642-00800	16	AG-14652-62800	16	AG-14659-80800	16	AG-14669-06900	16
AG-14642-00900	16	AG-14652-63400	16	AG-14659-80900	16	AG-14669-07000	16
AG-14642-01000	16	AG-14654-01300	16	AG-14659-81000	16	AG-14669-07100	16
AG-14642-01100	16	AG-14654-01400	16	AG-14660-00000	16	AG-14669-07200	16
AG-14642-01200	16	AG-14654-10000	16	AG-14660-00100	16	AG-14669-07300	16
AG-14642-01300	16	AG-14654-53400	16	AG-14660-00200	16	AG-14669-07400	16
AG-14642-01400	16	AG-14654-53500	16	AG-14660-00400	16	AG-14669-07500	16
AG-14642-01500	16	AG-14654-53600	16	AG-14660-00500	16	AG-14669-07800	16
AG-14642-01600	16	AG-14656-80000	16	AG-14660-00600	16	AG-14669-90020	16
AG-14642-01700	16	AG-14656-90300	16	AG-14660-00700	16	AG-14682-20720	16
AG-14642-01800	16	AG-14657-00420	16	AG-14660-00800	16	AG-14683-25500	16
AG-14642-01900	16	AG-14657-10000	16	AG-14660-00800	16	AG-14683-25600	16
AG-14642-02000	16	AG-14657-10100	16	AG-14660-01120	16	AG-14687-18020	16
AG-14642-02100	16	AG-14657-10200	16	AG-14660-01200	16	AG-14687-70000	16
AG-14642-02200	16	AG-14657-10300	16	AG-14660-01700	16	AG-14687-70100	16
AG-14642-02300	16	AG-14657-10400	16	AG-14660-04400	16	AG-14687-70200	16
AG-14642-02400	16	AG-14657-10500	16	AG-14660-10900	16	AG-14687-70300	16
AG-14642-02500	16	AG-14657-10600	16	AG-14660-20100	16	AG-14687-74700	16
AG-14642-02600	16	AG-14657-10700	16	AG-14660-20600	16	AG-14687-74800	16
AG-14642-02700	16	AG-14657-10800	16	AG-14660-22600	16	AG-14687-74900	16
AG-14642-02800	16	AG-14657-20020	16	AG-14660-30000	16	AG-14687-75000	16
AG-14642-02900	16	AG-14657-40120	16	AG-14660-30100	16	AG-14687-93720	16
AG-14642-03000	16	AG-14657-60200	16	AG-14660-30200	16	AG-14692-52520	16
AG-14642-03100	16	AG-14657-71800	16	AG-14660-30300	16	AG-14693-63000	16
AG-14642-03200	16	AG-14657-71900	16	AG-14660-30400	16	AG-14697-61200	16
AG-14642-03300	16	AG-14657-72000	16	AG-14660-30500	16	AG-14698-99000	16
AG-14642-03400	16	AG-14657-72100	16	AG-14660-30600	16	AG-30446-06300	9
AG-14642-03500	16	AG-14657-72200	16	AG-14662-00200	16	AG-30461-71601	1
AG-14642-03600	16	AG-14657-72300	16	AG-14662-05000	16	AG-30461-71601	14
AG-14642-03700	16	AG-14657-72400	16	AG-14662-05000	16	AG-30604-21402	10
AG-14642-03800	16	AG-14657-72500	16	AG-14662-11700	16	AG-30604-31601	10
AG-14642-03900	16	AG-14657-72600	16	AG-14662-11700	16	AG-30619-10501	4
AG-14642-04000	16	AG-14657-72700	16	AG-14662-14901	16	AG-30636-25901	1
AG-14642-04100	16	AG-14657-72800	16	AG-14665-00820	16	AG-30636-25901	8
AG-14642-04200	16	AG-14657-72900	16	AG-14666-20120	16	AG-30646-25064	13
AG-14642-04300	16	AG-14657-73000	16	AG-14666-91720	16	AG-31304-11700	10
AG-14642-04400	16	AG-14657-73100	16	AG-14669-01400	16	AG-31345-12100	13
AG-14642-04500	16	AG-14657-73200	16	AG-14669-01500	16	AG-31346-11900	1
AG-14642-04600	16	AG-14657-73300	16	AG-14669-01600	16	AG-31346-11900	13
AG-14642-04700	16	AG-14657-76700	16	AG-14669-01700	16	AG-31646-02200	13
AG-14642-04800	16	AG-14657-76800	16	AG-14669-01800	16	AG-32A01-01400	8
AG-14642-04900	16	AG-14657-76900	16	AG-14669-01900	16	AG-32A01-01600	8
AG-14642-05000	16	AG-14657-77000	16	AG-14669-03200	16	AG-32A01-02091	8
AG-14642-05100	16	AG-14657-77100	16	AG-14669-03300	16	AG-32A01-02501	1
AG-14642-05200	16	AG-14657-77200	16	AG-14669-03400	16	AG-32A01-02501	8
AG-14642-05300	16	AG-14657-77300	16	AG-14669-03500	16	AG-32A01-02700	8
AG-14642-05400	16	AG-14657-77400	16	AG-14669-04100	16	AG-32A01-03100	8
AG-14642-05500	16	AG-14657-77500	16	AG-14669-04200	16	AG-32A01-03200	8
AG-14642-05600	16	AG-14657-77600	16	AG-14669-04300	16	AG-32A03-01100	8
AG-14642-05700	16	AG-14657-77700	16	AG-14669-05800	16	AG-32A04-00202	10
AG-14642-05800	16	AG-14657-77800	16	AG-14669-05900	16	AG-32A04-01202	10

PARTS NUMBER INDEX　部品番号索引表

部品番号 PART No.	図番号 FIG.NO.	部品番号 PART No.	図番号 FIG.NO.	部品番号 PART No.	図番号 FIG.NO.	部品番号 PART No.	図番号 FIG.NO.
AG-32A04-02401	10	AG-32B01-12100	1	AG-32B61-01602	14		
AG-32A04-02801	1	AG-32B01-12100	8	AG-32B61-03400	14		
AG-32A04-02801	10	AG-32B04-03010	9	AG-32B61-03801	14		
AG-32A04-04701	10	AG-32B04-03200	1	AG-32B61-04100	14		
AG-32A04-04801	10	AG-32B04-03200	9	AG-32B61-16901	14		
AG-32A04-22010	10	AG-32B04-04011	10	AG-32B61-50100	14		
AG-32A05-02101	9	AG-32B05-00101	9	AG-32B61-50200	14		
AG-32A05-13100	9	AG-32B07-01014	2	AG-32B61-50300	14		
AG-32A07-01501	2	AG-32B07-06600	3	AG-32B61-50400	14		
AG-32A07-02600	2	AG-32B09-00010	3	AG-32B61-50500	14		
AG-32A07-04100	1	AG-32B09-00020	3	AG-32B61-50600	14		
AG-32A07-04100	6	AG-32B09-00030	3	AG-32B61-50700	14		
AG-32A07-06900	3	AG-32B09-00040	3	AG-32B65-00510	14		
AG-32A07-11700	1	AG-32B09-08101	3	AG-32B65-00510	16		
AG-32A07-11700	2	AG-32B09-08201	3	AG-32B66-00202	18		
AG-32A07-14201	1	AG-32B09-08301	3	AG-32B66-00202	19		
AG-32A07-14201	3	AG-32B13-00010	7	AG-32B66-00400	18		
AG-32A11-00105	6	AG-32B13-00200	7	AG-32B66-00400	19		
AG-32A11-00200	1	AG-32B19-09011	4	AG-32B66-01200	18		
AG-32A11-00200	6	AG-32B19-09021	4	AG-32B68-02890	18		
AG-32A11-01100	6	AG-32B19-09031	4	AG-32B68-11200	18		
AG-32A11-01600	6	AG-32B19-09041	4	AG-32B94-01070	1		
AG-32A11-03100	6	AG-32B20-01501	5	AG-32C04-04501	10		
AG-32A17-02010	4	AG-32B20-10011	5	AG-32C48-01101	13		
AG-32A17-02020	4	AG-32B21-06010	5	AG-32C61-06000	14		
AG-32A17-02030	4	AG-32B21-10030	5	AG-32C61-06000	15		
AG-32A17-08300	4	AG-32B22-00100	5	AG-32C61-06010	15		
AG-32A17-10100	4	AG-32B22-00800	5	AG-32161-13400	14		
AG-32A17-10200	4	AG-32B22-00800	14	AG-32161-13700	14		
AG-32A17-10300	4	AG-32B23-02300	6	AG-34307-02100	2		
AG-32A19-00012	4	AG-32B30-00201	1	AG-34307-02802	2		
AG-32A19-00400	4	AG-32B30-00201	11	AG-34307-02901	2		
AG-32A19-00501	4	AG-32B30-01102	11	AG-34307-12701	2		
AG-32A20-02901	5	AG-32B30-10090	11	AG-34323-00801	6		
AG-32A21-00900	5	AG-32B32-00200	1	AG-34330-04300	1		
AG-32A23-00101	5	AG-32B32-00200	11	AG-34330-04300	11		
AG-32A23-01100	6	AG-32B32-00600	11	AG-34332-31300	11		
AG-32A23-03010	6	AG-32B32-00800	1	AG-34340-00700	12		
AG-32A23-03500	2	AG-32B32-00901	11	AG-34404-02901	10		
AG-32A23-05400	6	AG-32B35-00012	12	AG-34405-00800	9		
AG-32A35-00600	1	AG-32B35-06200	12	AG-34407-02090	3		
AG-32A35-00600	12	AG-32B35-15100	12	AG-34407-11090	3		
AG-32A35-12101	6	AG-32B39-01100	12	AG-34446-05300	1		
AG-32A36-05012	12	AG-32B39-01200	1	AG-34446-05300	13		
AG-32A40-01100	12	AG-32B39-01200	12	AG-34462-01050	17		
AG-32A45-00300	13	AG-32B40-00100	12	AG-34462-01060	17		
AG-32A45-00400	1	AG-32B42-12101	7	AG-34462-01070	17		
AG-32A45-00400	13	AG-32B42-20100	7	AG-34462-11030	17		
AG-32A45-00500	1	AG-32B43-11700	9	AG-34462-21040	17		
AG-32A45-00500	13	AG-32B45-00901	13	AG-34462-30030	14		
AG-32A46-03100	13	AG-32B45-04100	13	AG-34462-30030	17		
AG-32A61-01101	14	AG-32B45-05500	1	AG-34466-31302	18		
AG-32A61-03200	14	AG-32B45-05500	13	AG-34661-02000	15		
AG-32A61-08800	14	AG-32B45-10031	13	AG-34721-03200	5		
AG-32A61-09600	14	AG-32B46-00030	13	AG-34721-03700	5		
AG-32A62-10400	17	AG-32B46-00200	1	AG-34761-08800	14		
AG-32A68-06800	18	AG-32B46-00200	13	AG-92364-02500	14		
AG-32A68-06800	20	AG-32B46-00301	13				
AG-32A91-05100	1	AG-32B46-01100	13				
AG-32B01-01011	8	AG-32B48-00100	13				

No. PE-S6S-31TFLB

2003年12月　発行
2004年11月　改訂

TCM株式会社
本　社　　大阪市西区京町堀１－１５－１０
発　行　　ＴＣＭテクノ株式会社

ISSUED : December, 2003
REVISED : November, 2004

TCM CORPORATION
INTERNATIONAL MARKETING DIVISION: 1-15-5, Nishi-shimbashi, Minato-ku, Tokyo
105-0003, Japan
FAX: Japan +81-3-35918152, 3-35918153

無断で転載・複製を禁ず
All rights reserved.

I-0411001(H) Printed in Japan